Revision History				
Rev	ECN #	Approved Date	Approved by	Notes

BLOCK DIAGRAM

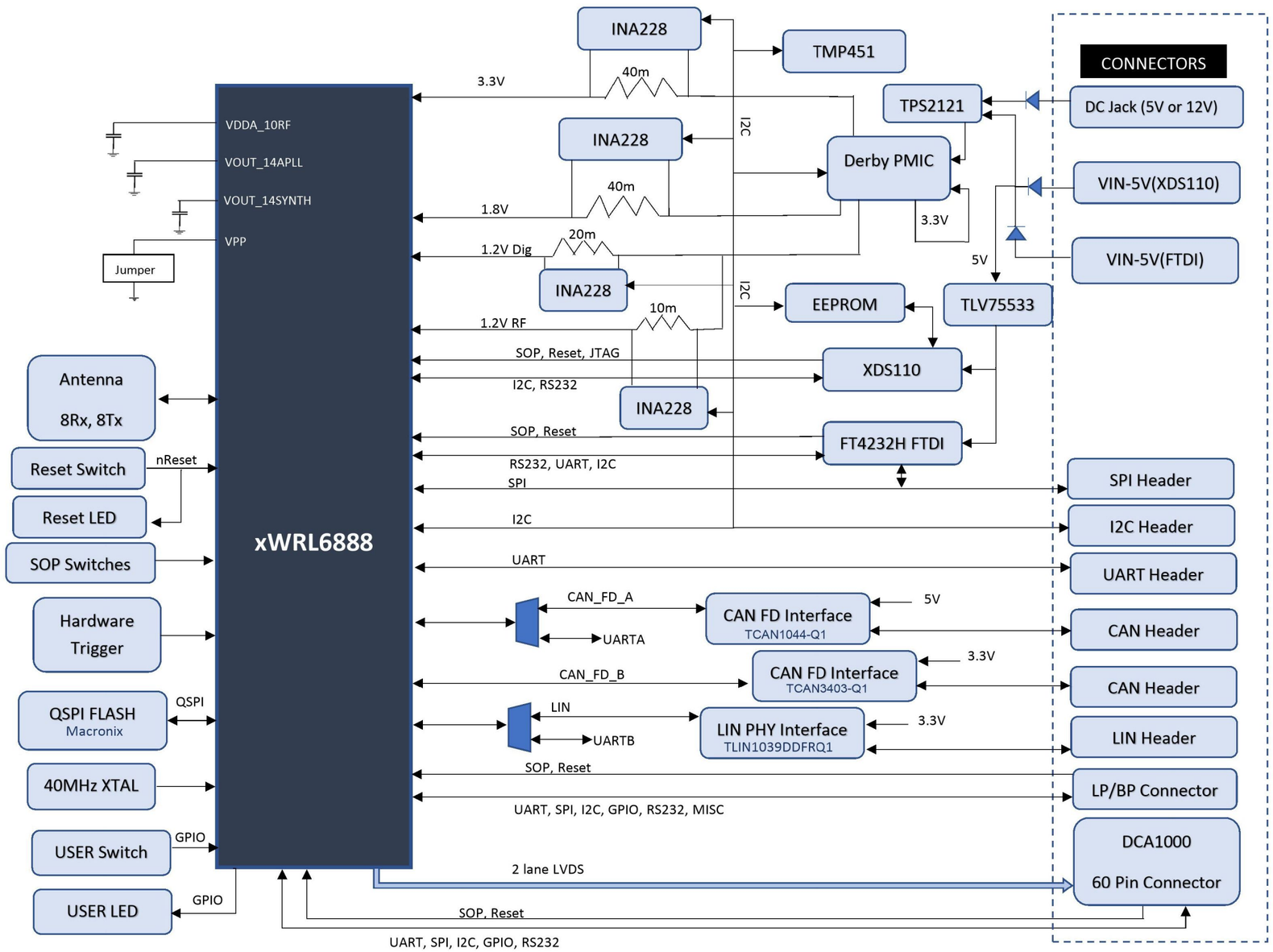

S.No	DESCRIPTION	I2C ADDRESS
1	CURRENT SENSOR 3.3V	100 0101
2	CURRENT SENSOR 1.8V	100 0000
3	CURRENT SENSOR 1.2V	100 0001
4	CURRENT SENSOR RF_1.2V	100 0100
5	TEMPERATURE SENSOR	1001 100
6	EEPROM	1010 0XX

Texas Instruments and/or its licensors do not warrant the accuracy or completeness of this specification or any information contained therein. Texas Instruments and/or its licensors do not warrant that this design will meet the specifications, will be suitable for your application or fit for any particular purpose, or will operate in an implementation. Texas Instruments and/or its licensors do not warrant that the design is production worthy. You should completely validate and test your design implementation to confirm the system functionality for your application.

Orderable: AWRL6888EVM	Designed for: Public Release	Mod. Date: 14-08-2025	
TID #: N/A	Project Title: xWRL6888 EVM		
Number: PROC207 Rev: A	Sheet Title: BLOCK DIAGRAM		
SVN Rev: 4450	Assembly Variant: 01_AWR	Sheet: 1 of 18	
Drawn By: Mistral	File: PROC207A_Block_Diagram.SchDoc	Size: B	
Engineer: Mistral	Contact: http://www.ti.com/support		

Texas Instruments
http://www.ti.com

© Texas Instruments 2023

MUX BLOCK DIAGRAM

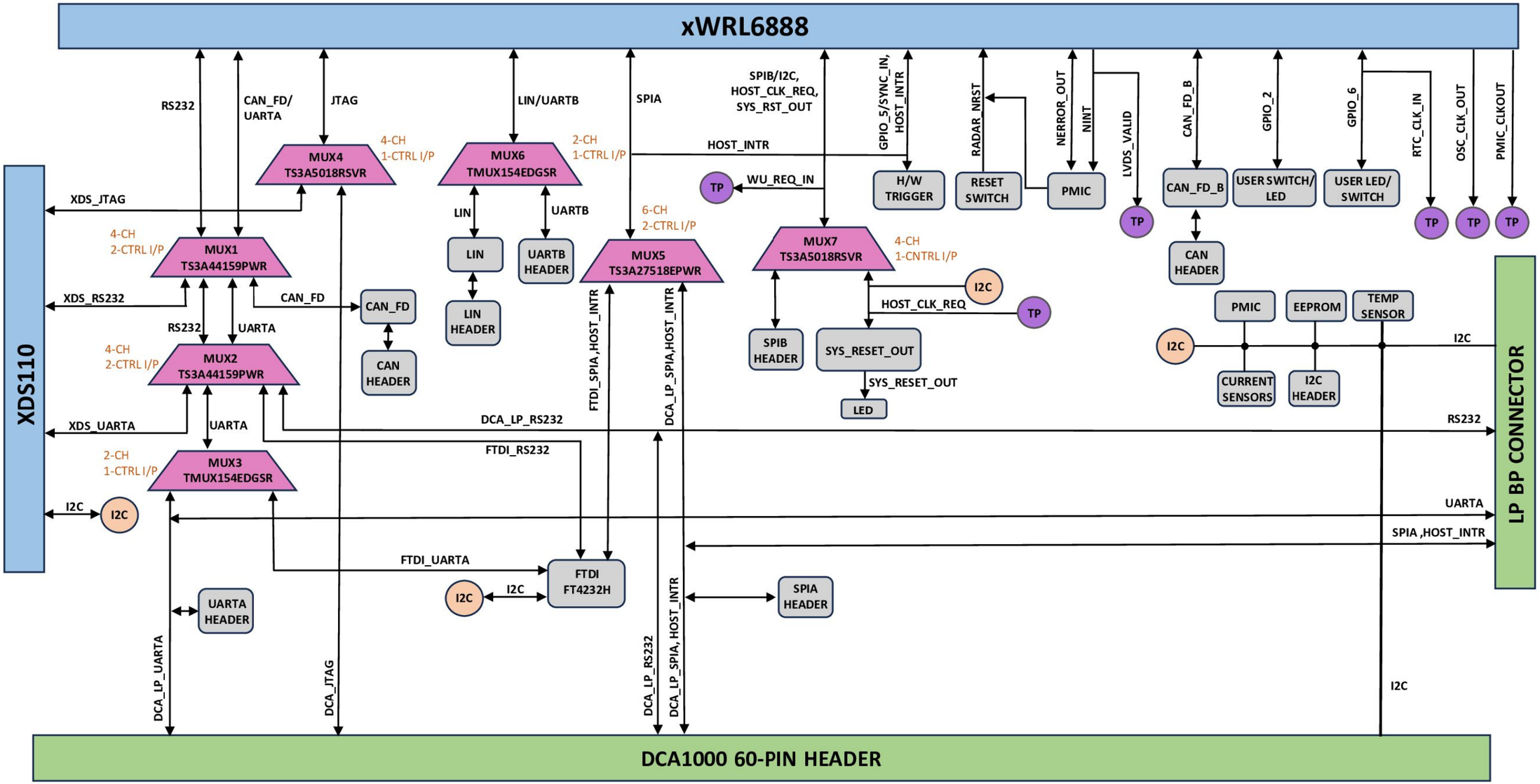

Orderable: AWRL6888EVM	Designed for: Public Release	Mod. Date: 14-08-2025	
TID #: N/A	Project Title: xWRL6888 EVM		
Number: PROC207 Rev: A	Sheet Title: MUX BLOCK DIAGRAM		
SVN Rev: 4450	Assembly Variant: 01_AWR	Sheet: 2 of 18	
Drawn By: Mistral	File: PROC207A_MUX_Block_Diagram.SchDoc	Size: B	
Engineer: Mistral	Contact: http://www.ti.com/support		

Texas Instruments and/or its licensors do not warrant the accuracy or completeness of this specification or any information contained therein. Texas Instruments and/or its licensors do not warrant that this design will meet the specifications, will be suitable for your application or fit for any particular purpose, or will operate in an implementation. Texas Instruments and/or its licensors do not warrant that the design is production worthy. You should completely validate and test your design implementation to confirm the system functionality for your application.

Texas Instruments
http://www.ti.com
© Texas Instruments 2023

TABLE OF CONTENTS

SHEET NO.	SHEET NAME
1	BLOCK DIAGRAM
2	MUX BLOCK DIAGRAM
3	TABLE OF CONTENTS
4	USB_PWR_DC_JACK_SWITCH
5	PMIC
6	xWRL6888_CHIP
7	xWRL6888_CHIP-POWER
8	DECOUPLING_CAPS-QSPI_FLASH_
9	TEMP_CURRENT_SENSORS_EEPROM
10	ANALOG_MUX_SOP_CTRL
11	ANALOG_MUX_SPI_DCA/FTDI
12	XDS110_INTERFACE
13	MUX_CAN_FD
14	CAN_LIN_PHY_INTERFACE
15	FTDI- USB to SPI CONVERTER
16	DCA1000_CONN_RESET
17	I2C_SPI_CONN_HEADER
18	EVM_HARDWARE

Texas Instruments and/or its licensors do not warrant the accuracy or completeness of this specification or any information contained therein. Texas Instruments and/or its licensors do not warrant that this design will meet the specifications, will be suitable for your application or fit for any particular purpose, or will operate in an implementation. Texas Instruments and/or its licensors do not warrant that the design is production worthy. You should completely validate and test your design implementation to confirm the system functionality for your application.

© Texas Instruments 2023

USB CONNECTOR

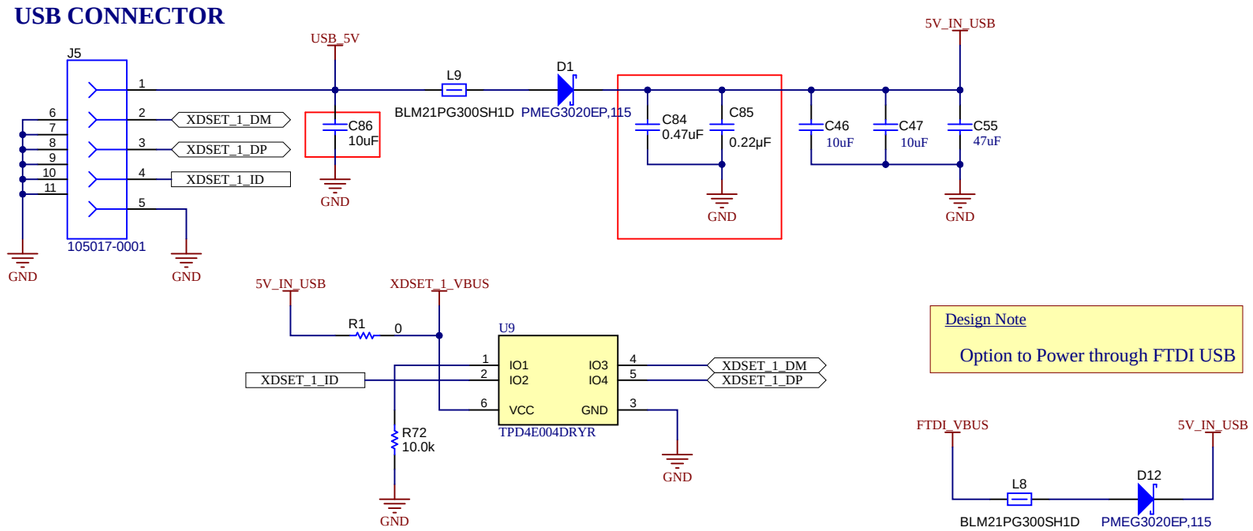

DC JACK

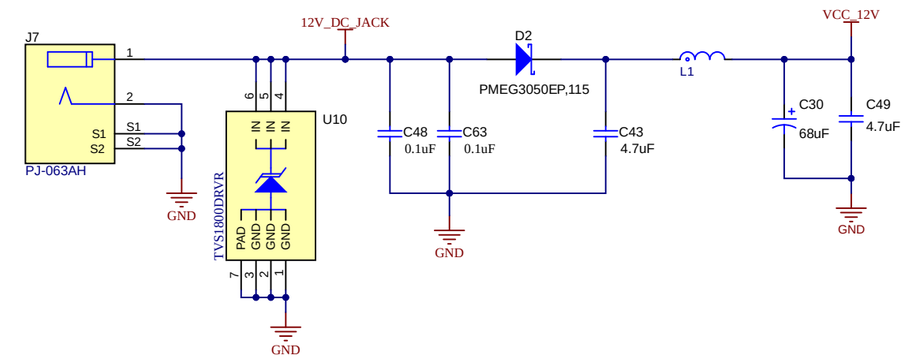

POWER LOAD SWITCH

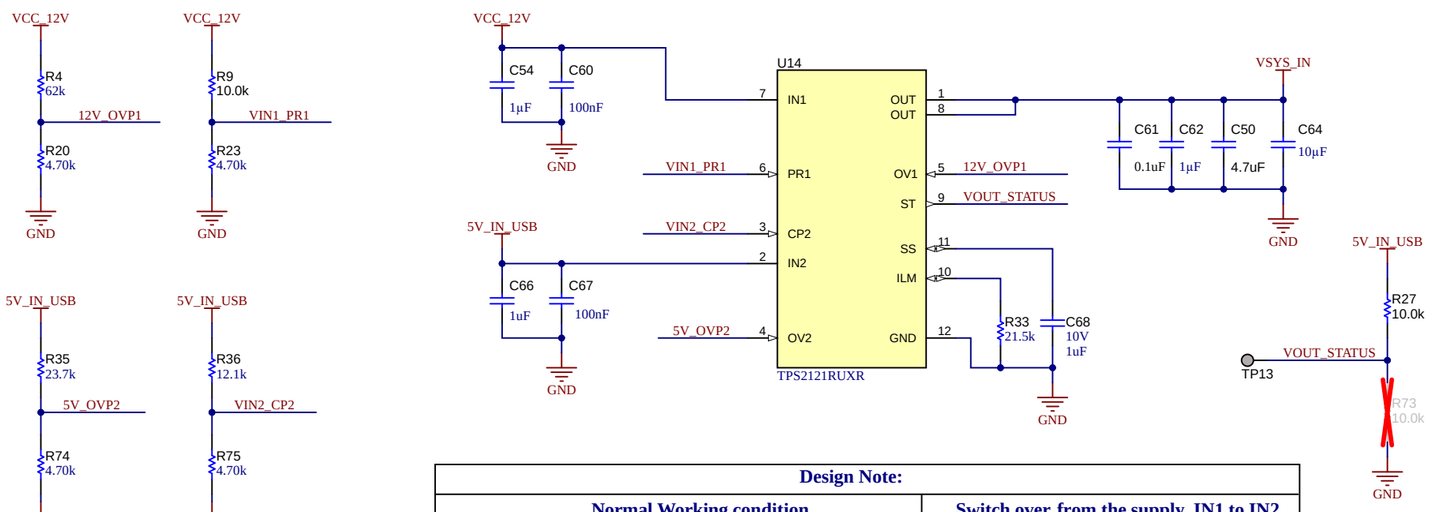

Design Note:					
Normal Working condition				Switch over from the supply IN1 to IN2	
VIN1=12V VPR1=3.83V	VIN2=5V VCP2=1.39V	VIN1=5V VPR1=1.6V	VIN2=5V VCP2=1.39V	VIN1<4.28V VPR1=1.36V	VIN2=5V VCP2=1.39V
VREF(Internal)=1.06V Current Limit = 4.5A **VOUT=VIN1(12V)**		VREF(Internal)=1.06V Current Limit = 4.5A **VOUT=VIN1 (5V)**		VREF(Internal)=1.06V Current Limit = 4.5A **VOUT= VIN2 (5V)**	
VPR1> VCP2> VREF ==> VOUT==>VIN1				VCP2 > VPR1> VREF ==> VOUT ==> VIN2	
Over Voltage Condition					
Over Voltage Protection :15V, @12V for VIN1 Over Voltage Protection : 6.46V @ 5V for VIN2					

POWER ON LED INDICATION

PGOOD LED

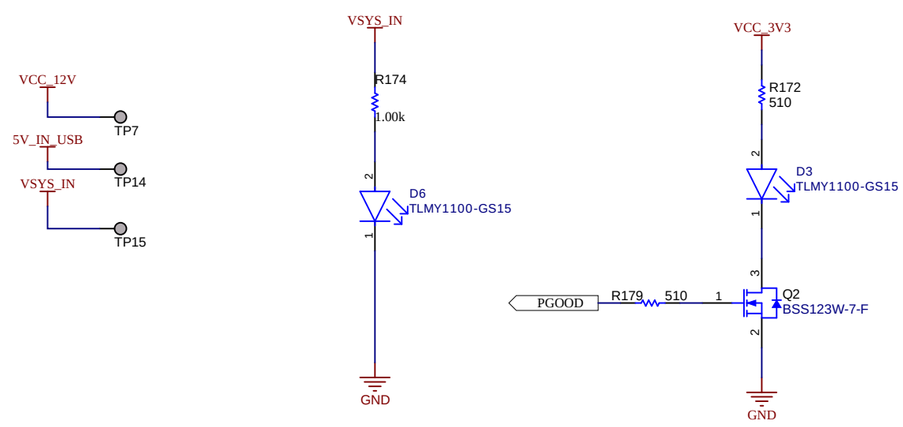

Texas Instruments and/or its licensors do not warrant the accuracy or completeness of this specification or any information contained therein. Texas Instruments and/or its licensors do not warrant that this design will meet the specifications, will be suitable for your application or fit for any particular purpose, or will operate in an implementation. Texas Instruments and/or its licensors do not warrant that the design is production worthy. You should completely validate and test your design implementation to confirm the system functionality for your application.

Orderable: AWRL6888EVM		Designed for: Public Release	Mod. Date: 14-08-2025
TID #: N/A		Project Title: xWRL6888 EVM	
Number: PROC207	Rev: A	Sheet Title: USB_PWR_DC_JACK_SWITCH	
SVN Rev: 4450		Assembly Variant: 01_AWR	Sheet: 4 of 18
Drawn By: Mistral		File: PROC207A_USB_PWR_DC_Jack_Switch.SchDoc	Size: B
Engineer: Mistral		Contact: http://www.ti.com/support	

Texas Instruments
http://www.ti.com

© Texas Instruments 2023

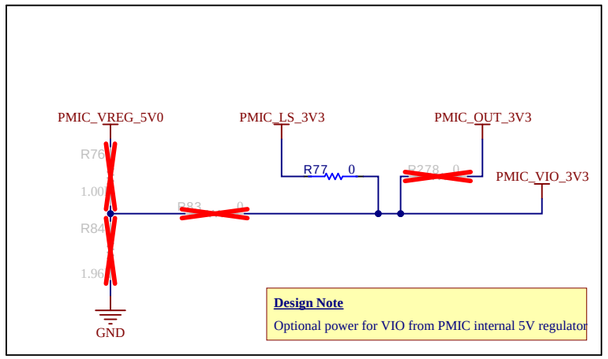

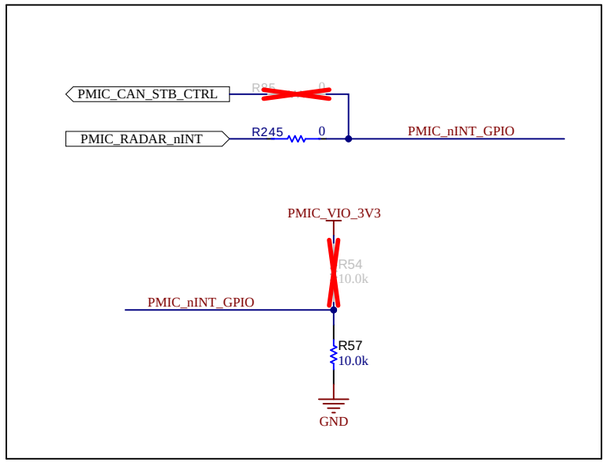

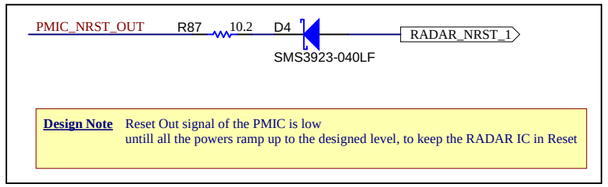

PMIC-3.3V,1.8V, 1.2V

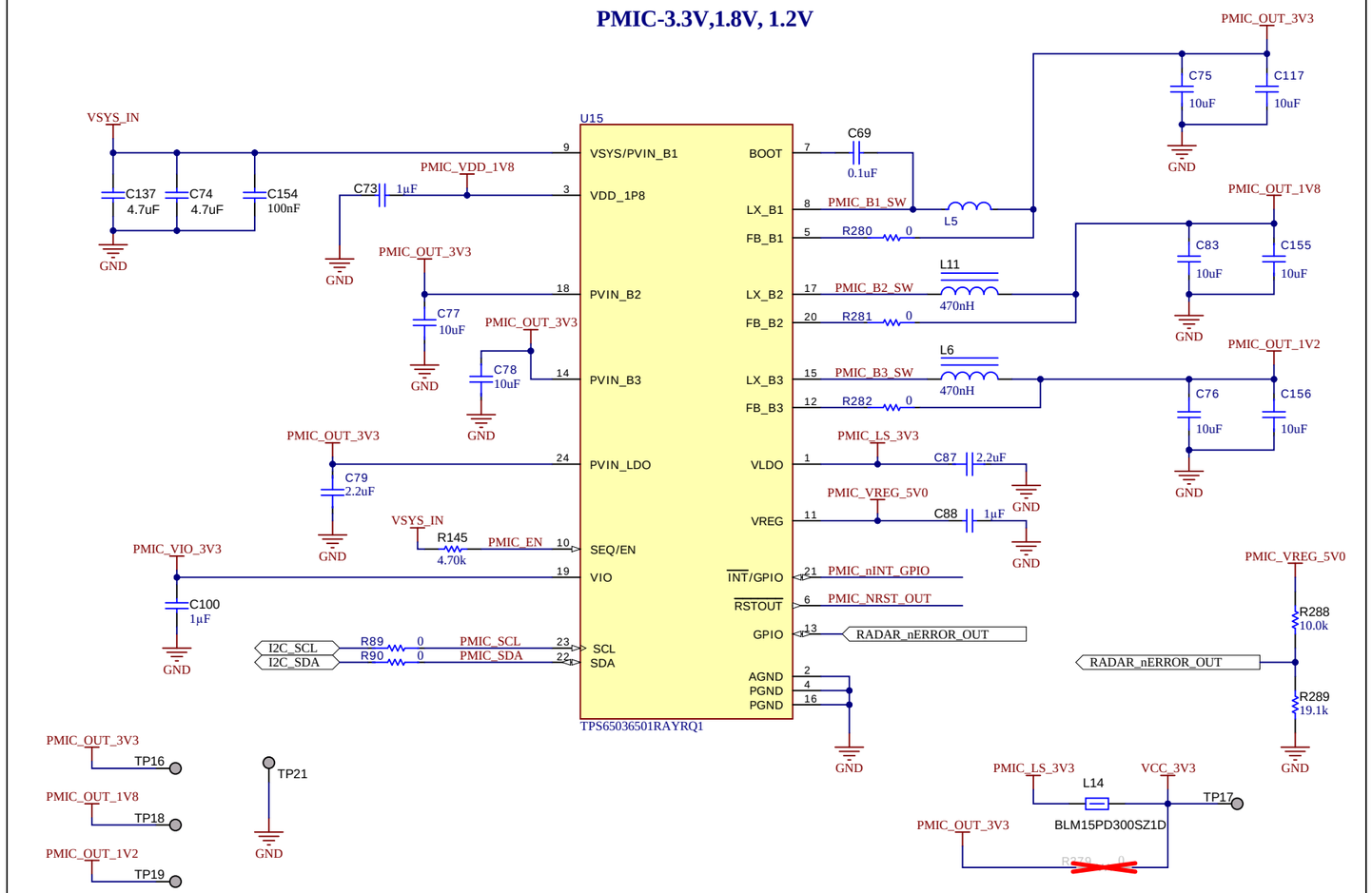

LC FILTER

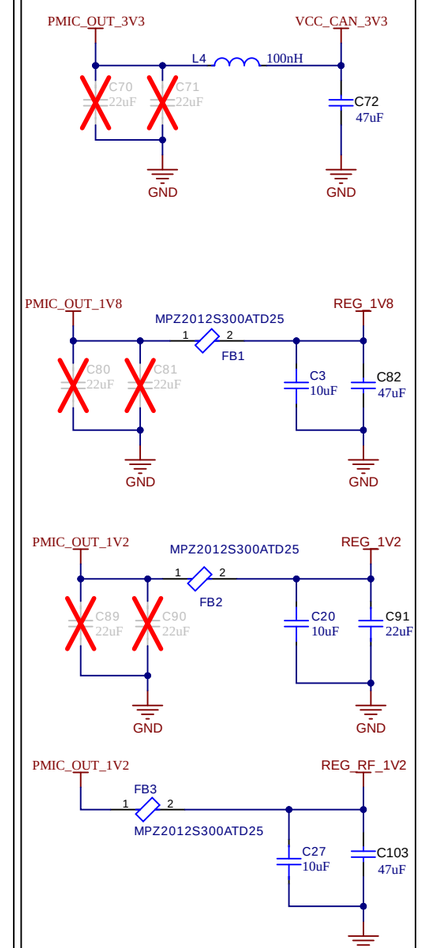

XDS 3.3V LDO

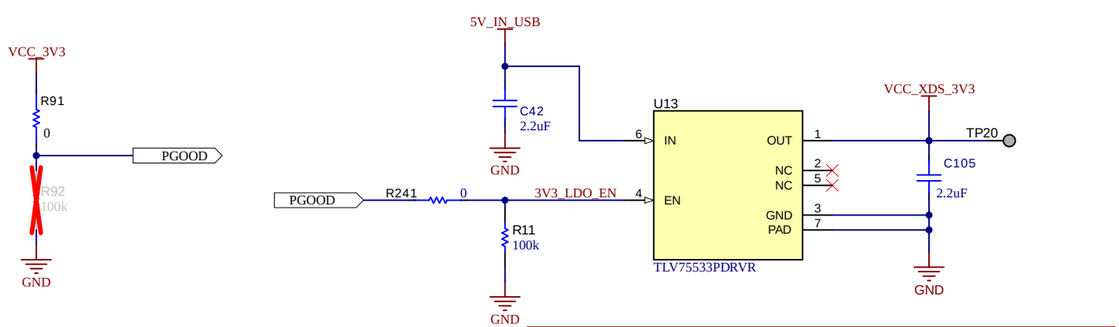

Design Note By Default LDO is disabled
When PMIC LDO/Load Switch is power up, then it gets enabled

VPP 1.7V LDO

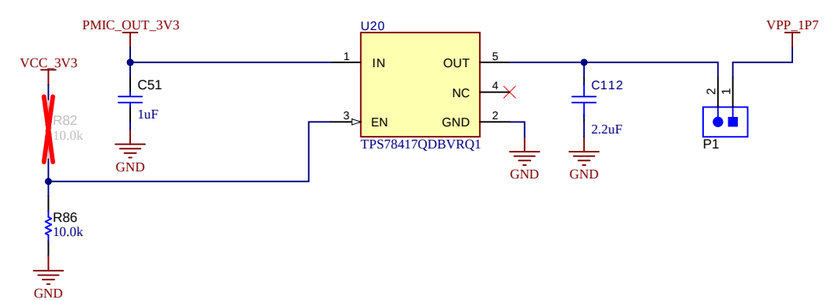

Orderable: AWRL6888EVM	Designed for: Public Release	Mod. Date: 14-08-2025	
TID #: N/A	Project Title: xWRL6888 EVM		
Number: PROC207 Rev: A	Sheet Title: PMIC and LDOs		
SVN Rev: 4450	Assembly Variant: 01_AWR	Sheet: 5 of 18	
Drawn By: Mistral	File: PROC207A_PMIC.SchDoc	Size: B	
Engineer: Mistral	Contact: http://www.ti.com/support		

Texas Instruments and/or its licensors do not warrant the accuracy or completeness of this specification or any information contained therein. Texas Instruments and/or its licensors do not warrant that this design will meet the specifications, will be suitable for your application or fit for any particular purpose, or will operate in an implementation. Texas Instruments and/or its licensors do not warrant that the design is production worthy. You should completely validate and test your design implementation to confirm the system functionality for your application.

Texas Instruments
http://www.ti.com
© Texas Instruments 2023

xWRL6888 CHIP -INTERFACE

Design Note:
1. Antenna traces are GCPW traces
2. 'Generic No ERCs' were placed intentionally on Single Port RF Tx, Rx lines

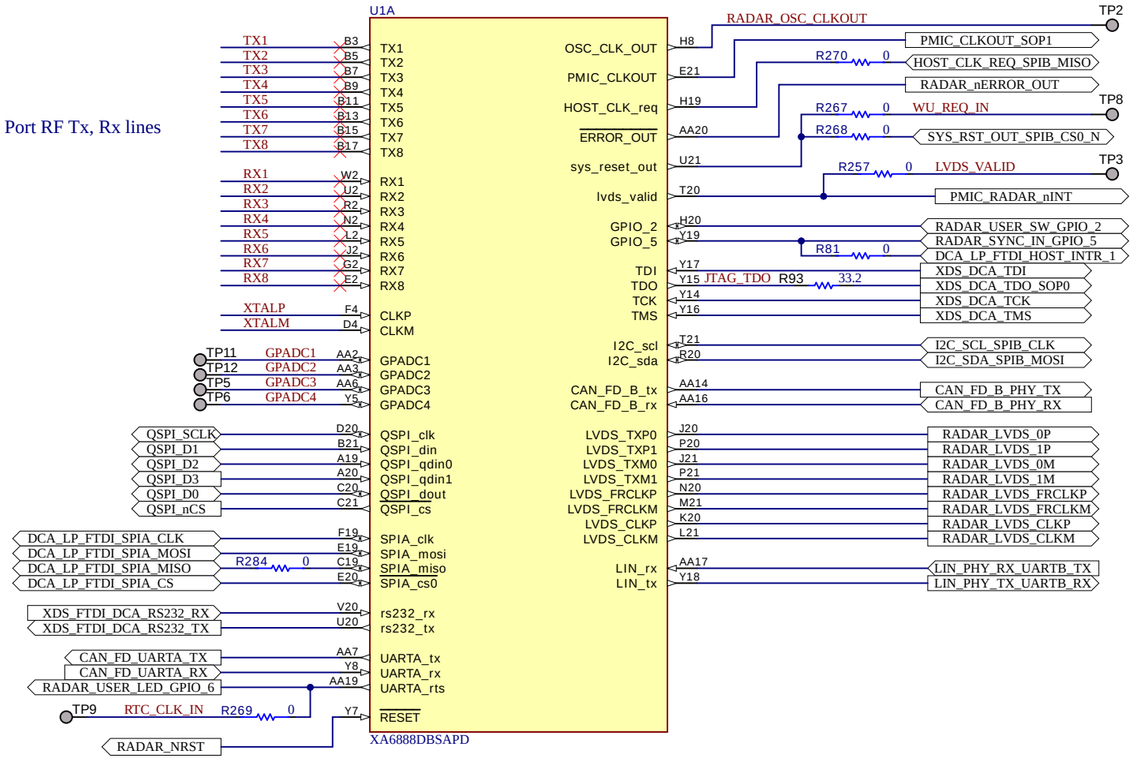

Design Note:
RADAR_SYNC_IN net is connected for the hardware trigger

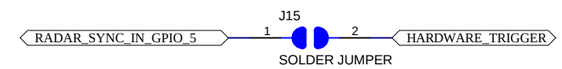

Review Note: Solder Jumper Added for H/W trigger

40 MHz CRYSTAL OSCILLATOR

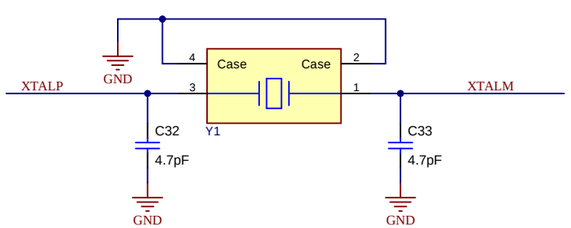

Alternate Crystal part number : CX2016SA40000D0PTWC1

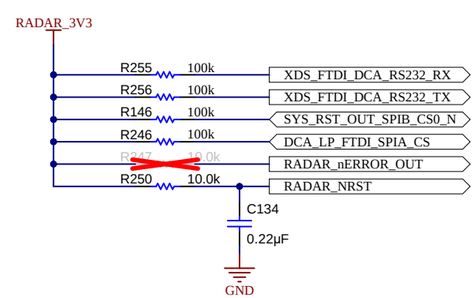

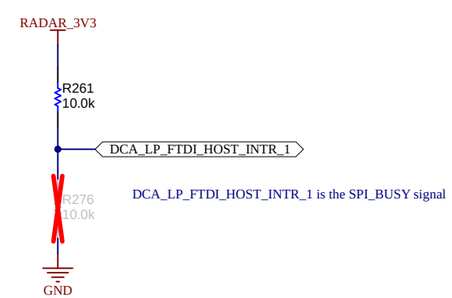

DCA_LP_FTDI_HOST_INTR_1 is the SPI_BUSY signal

Texas Instruments and/or its licensors do not warrant the accuracy or completeness of this specification or any information contained therein. Texas Instruments and/or its licensors do not warrant that this design will meet the specifications, will be suitable for your application or fit for any particular purpose, or will operate in an implementation. Texas Instruments and/or its licensors do not warrant that the design is production worthy. You should completely validate and test your design implementation to confirm the system functionality for your application.

Orderable: AWRL6888EVM		Designed for: Public Release	Mod. Date: 14-08-2025
TID #: N/A		Project Title: xWRL6888 EVM	
Number: PROC207	Rev: A	Sheet Title: xWRL6888_CHIP	
SVN Rev: 4450		Assembly Variant: 01_AWR	Sheet: 6 of 18
Drawn By: Mistral		File: PROC207A_Chip.SchDoc	Size: B
Engineer: Mistral		Contact: http://www.ti.com/support	

Texas Instruments
http://www.ti.com
© Texas Instruments 2023

XWRL6888 POWER

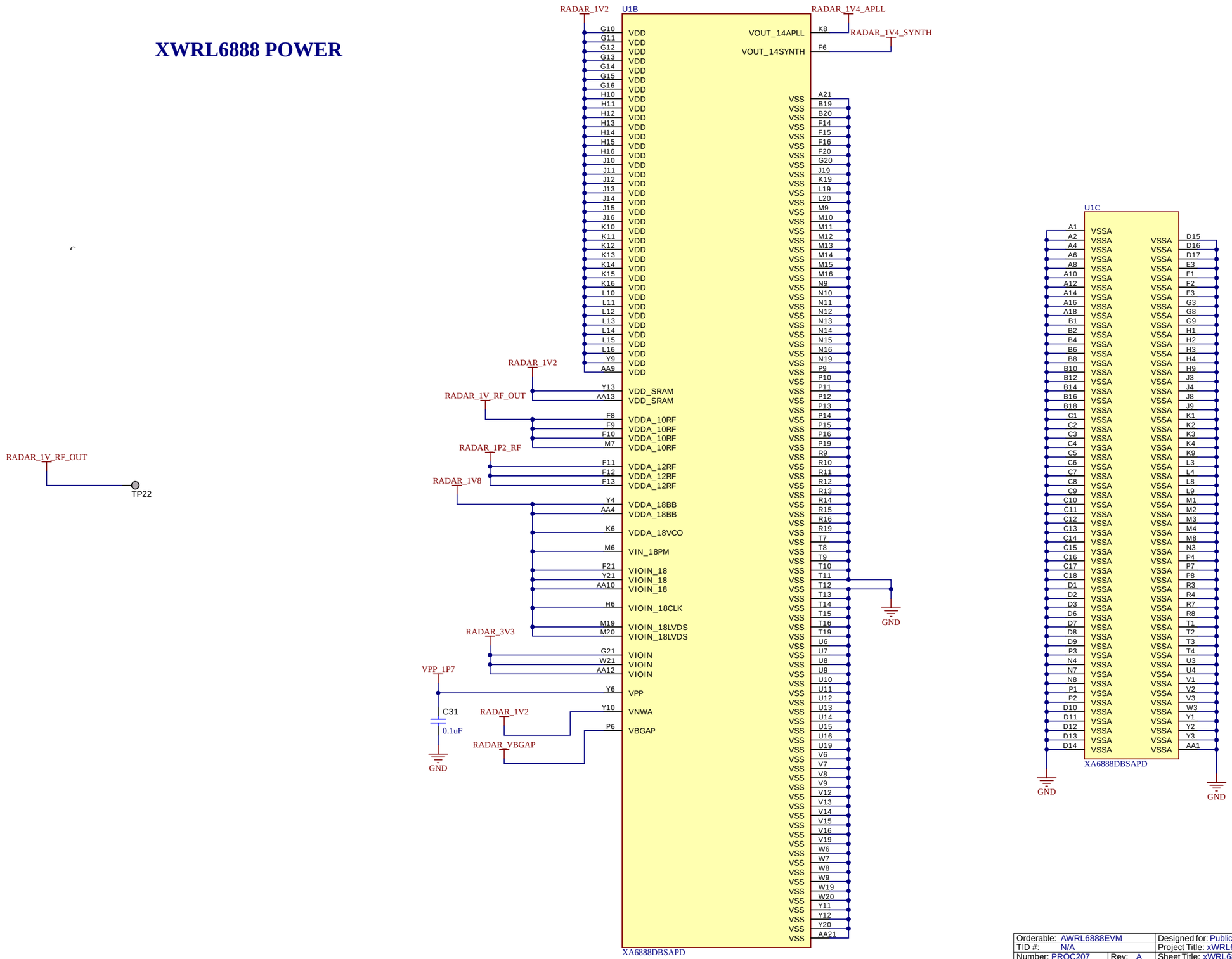

Orderable: AWRL6888EVM		Designed for: Public Release	Mod. Date: 14-08-2025
TID #: N/A		Project Title: xWRL6888 EVM	
Number: PROC207	Rev: A	Sheet Title: xWRL6888_POWER	
SVN Rev: 4450		Assembly Variant: 01_AWR	Sheet: 7 of 18
Drawn By: Mistral		File: PROC207A_Chip_Power.SchDoc	Size: B
Engineer: Mistral		Contact: http://www.ti.com/support	

TEXAS INSTRUMENTS
http://www.ti.com

Texas Instruments and/or its licensors do not warrant the accuracy or completeness of this specification or any information contained therein. Texas Instruments and/or its licensors do not warrant that this design will meet the specifications, will be suitable for your application or fit for any particular purpose, or will operate in an implementation. Texas Instruments and/or its licensors do not warrant that the design is production worthy. You should completely validate and test your design implementation to confirm the system functionality for your application.

© Texas Instruments 2023

SUPPLY_DECOUPLING_CAPS

1.8V POWER SUPPLY VOLTAGE RAILS

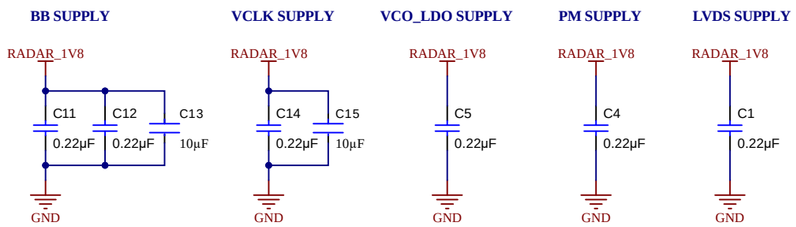

I/O SUPPLY VOLTAGE RIALS

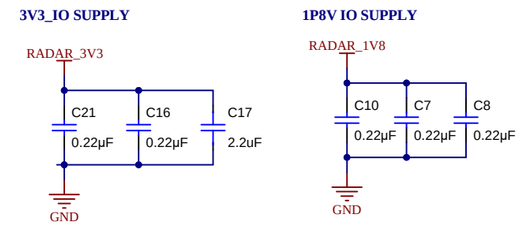

1.2V POWER SUPPLY VOLTAGE RAILS

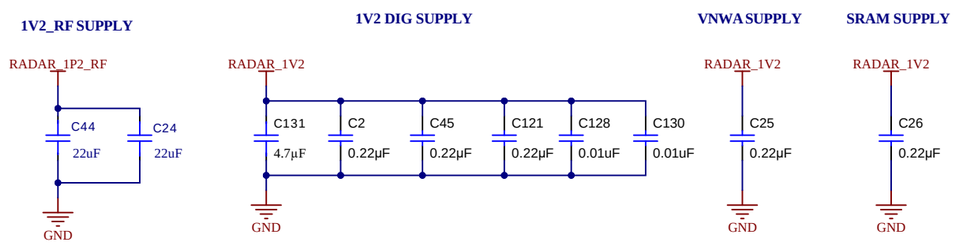

INTERNAL GENERATED VOLTAGE RAILS

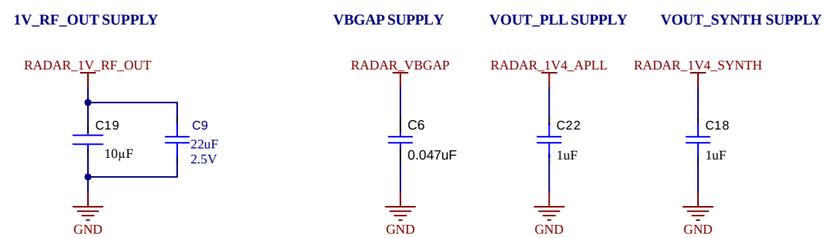

QSPI FLASH

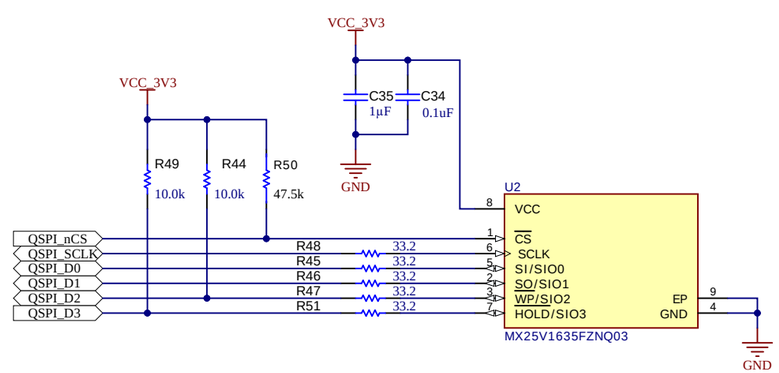

Texas Instruments and/or its licensors do not warrant the accuracy or completeness of this specification or any information contained therein. Texas Instruments and/or its licensors do not warrant that this design will meet the specifications, will be suitable for your application or fit for any particular purpose, or will operate in an implementation. Texas Instruments and/or its licensors do not warrant that the design is production worthy. You should completely validate and test your design implementation to confirm the system functionality for your application.

Orderable: AWRL6888EVM		Designed for: Public Release	Mod. Date: 14-08-2025
TID #: N/A		Project Title: xWRL6888 EVM	
Number: PROC207	Rev: A	Sheet Title: DECOUPLING_CAPS_QSPI_FLASH	
SVN Rev: 4450		Assembly Variant: 01_AWR	Sheet: 8 of 18
Drawn By: Mistral		File: PROC207A_Decoupling_caps- QSPI Flash.SchDoc	Size: B
Engineer: Mistral		Contact: http://www.ti.com/support	

Texas Instruments
http://www.ti.com

© Texas Instruments 2023

CURRENT SENSOR- 1V8

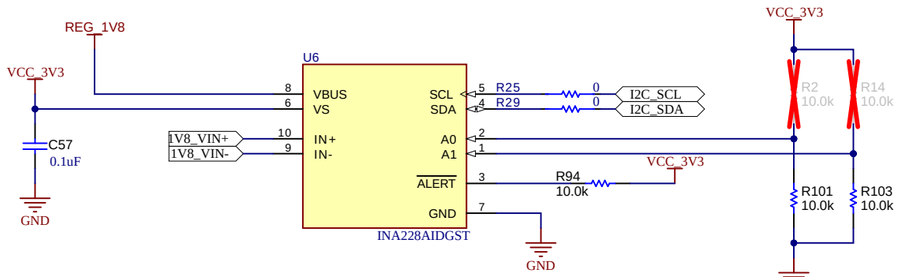

I2C ADDRESS : 1000 000

CURRENT SENSOR- 3V3

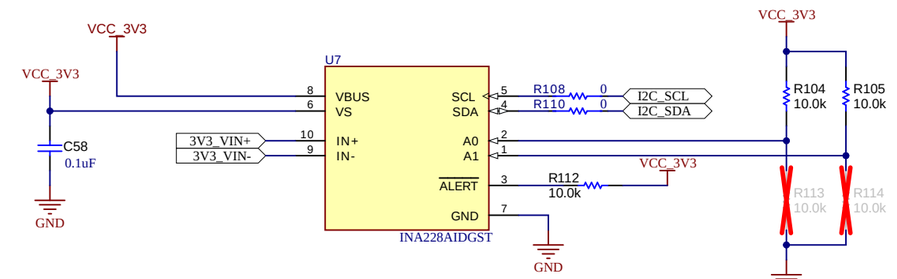

I2C ADDRESS : 1000 101

CURRENT SENSOR- 1V2

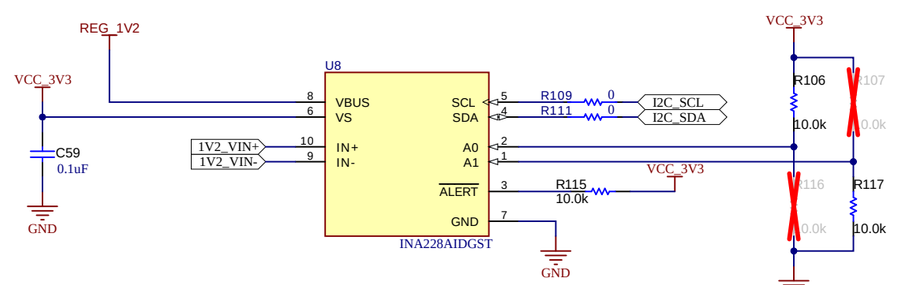

I2C ADDRESS : 1000 001

CURRENT SENSOR- RF_1V2

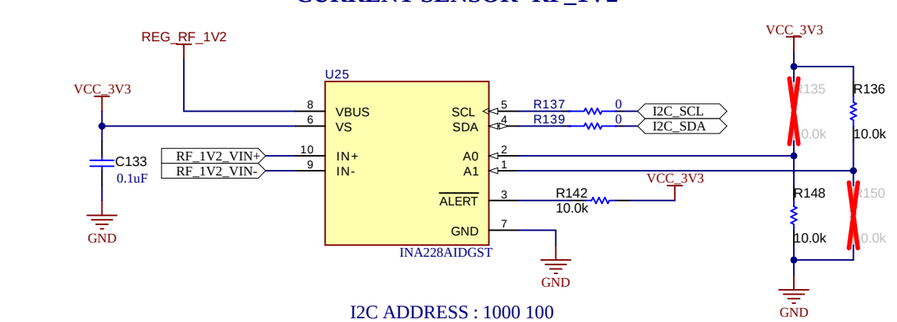

I2C ADDRESS : 1000 100

CURRENT SENSE RESISTORS

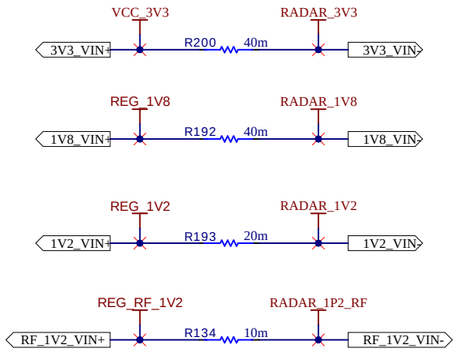

Design Note: 'Generic No ERCs' were placed intentionally on either sides of Current sense resistors

TEMPERATURE SENSOR

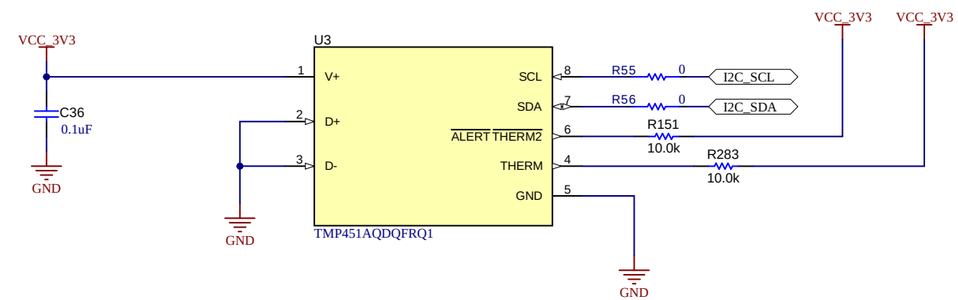

I2C ADDRESS : 1001 100

EEPROM

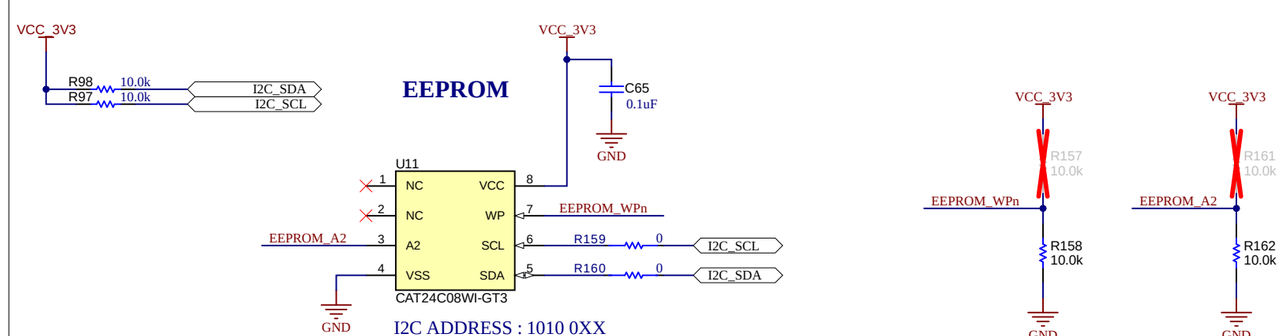

I2C ADDRESS : 1010 0XX

Texas Instruments and/or its licensors do not warrant the accuracy or completeness of this specification or any information contained therein. Texas Instruments and/or its licensors do not warrant that this design will meet the specifications, will be suitable for your application or fit for any particular purpose, or will operate in an implementation. Texas Instruments and/or its licensors do not warrant that the design is production worthy. You should completely validate and test your design implementation to confirm the system functionality for your application.

Orderable: AWRL6888EVM	Designed for: Public Release	Mod. Date: 14-08-2025	
TID #: N/A	Project Title: xWRL6888 EVM		
Number: PROC207 Rev: A	Sheet Title: TEMP_CURRENT_SENSORS_EEPROM		
SVN Rev: 4450	Assembly Variant: 01_AWR	Sheet: 9 of 18	
Drawn By: Mistral	File: PROC207A_Temp_Current_sensors_EPROM.SchDoc		
Engineer: Mistral	Contact: http://www.ti.com/support		

Texas Instruments
http://www.ti.com

© Texas Instruments 2023

JTAG-ANALOG MUX

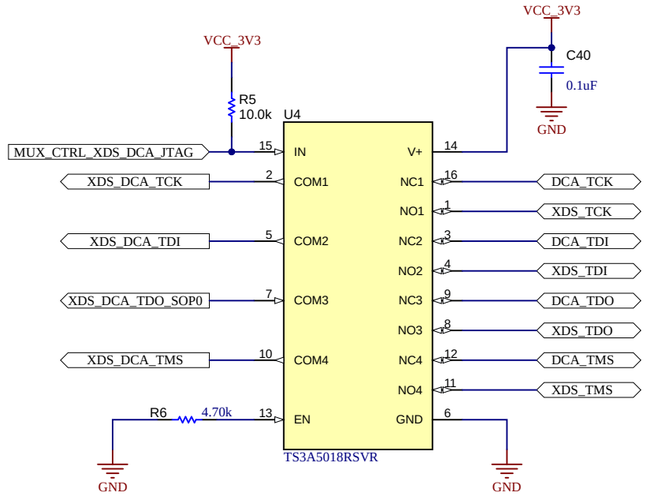

SOP & MUX CONTROL

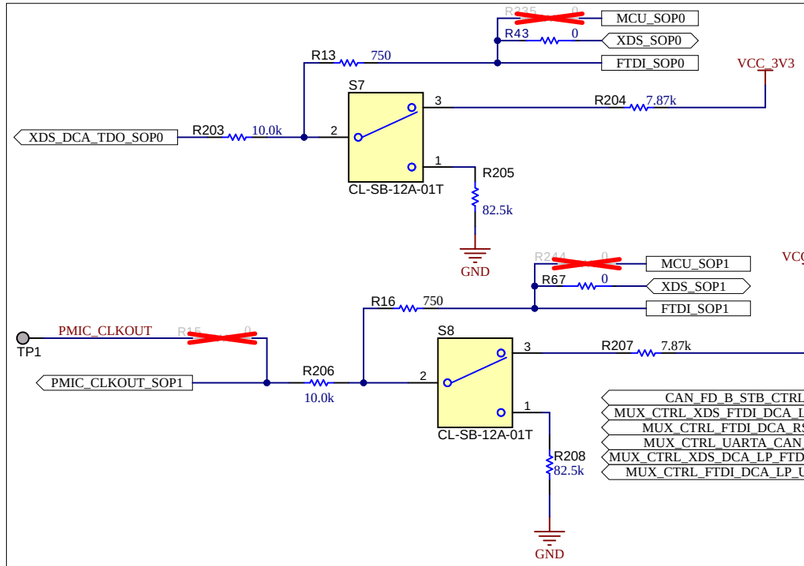

MUX / CONTROL TABLE

	Switch Position OFF	Switch Position ON
S4.1	CAN PHY : Stand-by Mode Disable	CAN PHY : Stand-by Mode Enable
S4.2	LIN PHY : Enable	LIN PHY : Disable
S4.3	FTDI SPI	DCA SPI
S4.4	XDS_JTAG	DCA_JTAG
S4.5	UARTB	LIN
S4.6	SPIB	I2C/ HOST_CLK_REQ/SYS_RST_OUT

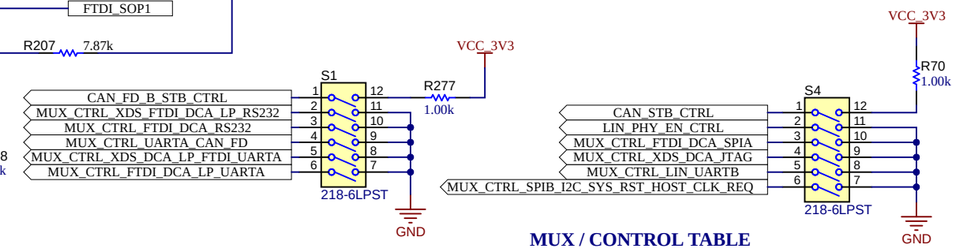

SOP CONFIGURATION			SWITCH POSITION	
SOP Mode	**PMIC_CLK_OUT, TDO**	**Combination**	**S8(SOP1)**	**S7(SOP0)**
SOP_MODE1	Device management mode / QSPI Flashing mode	0 0	**2-1**	**2-1**
SOP_MODE2	Application mode / Functional mode	0 1	**2-1**	**2-3**
SOP_MODE4	Debug mode / mmWave studio connectivity mode	1 1	**2-3**	**2-3**

MUX / CONTROL TABLE

	Switch Position OFF	Switch Position ON
S1.1	CAN B PHY : Stand-by Mode Disable	CAN B PHY : Stand-by Mode Enable
S1.2	XDS_RS232	FTDI_DCA_LP/BP_RS232
S1.3	FTDI_RS232	DCA_LP/BP_RS232
S1.4	CAN_FD	XDS_DCA_LP/BP_FTDI_UARTA
S1.5	DCA_LP/BP_FTDI_UARTA	XDS_UARTA
S1.6	FTDI_UARTA	DCA_LP/BP_UART

UARTA, RS232-ANALOG SWITCH

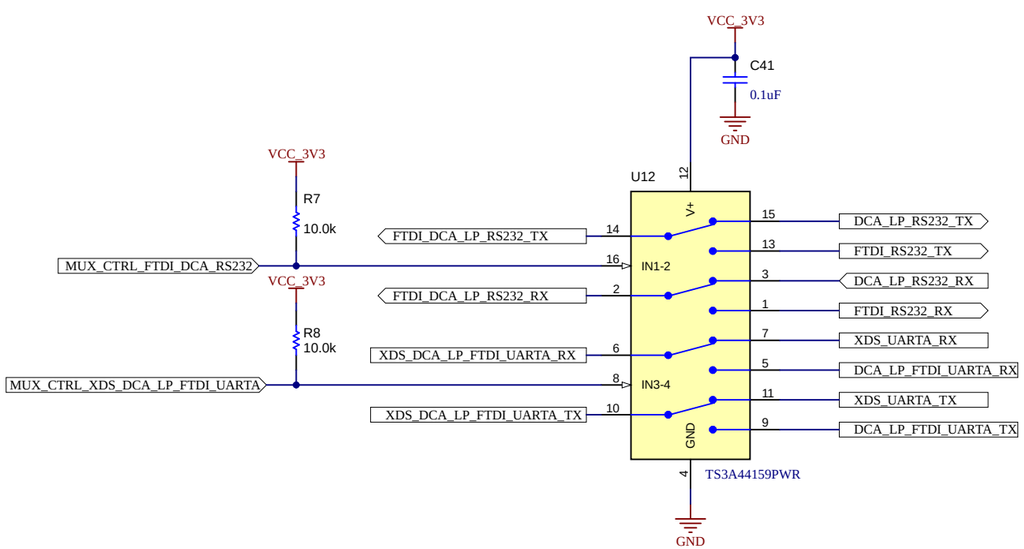

ANALOG MUX - FTDI UARTA / DCA_LP UARTA

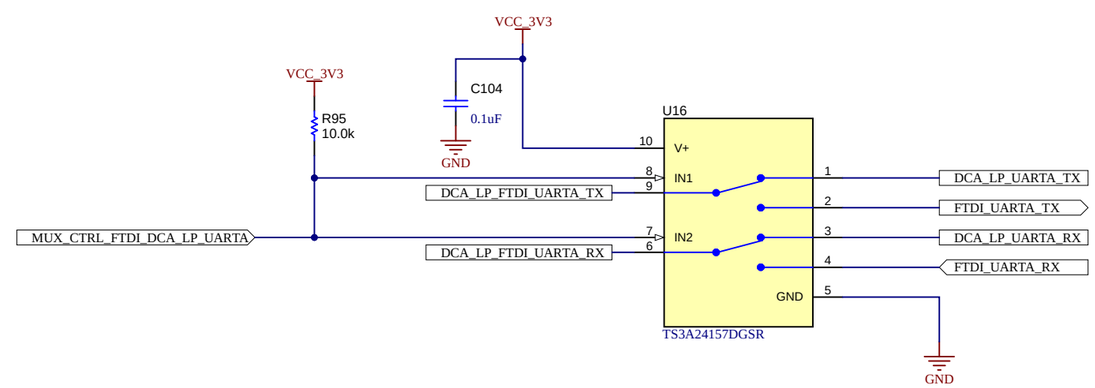

Texas Instruments and/or its licensors do not warrant the accuracy or completeness of this specification or any information contained therein. Texas Instruments and/or its licensors do not warrant that this design will meet the specifications, will be suitable for your application or fit for any particular purpose, or will operate in an implementation. Texas Instruments and/or its licensors do not warrant that the design is production worthy. You should completely validate and test your design implementation to confirm the system functionality for your application.

Orderable: AWRL6888EVM	Designed for: Public Release	Mod. Date: 14-08-2025
TID #: N/A	Project Title: xWRL6888 EVM	
Number: PROC207 Rev: A	Sheet Title: ANALOG_MUX_SOP_CTRL	
SVN Rev: 4450	Assembly Variant: 01_AWR	Sheet: 10 of 18
Drawn By: Mistral	File: PROC207A_Analog_Mux_SOP_Ctrl.SchDoc	Size: B
Engineer: Mistral	Contact: http://www.ti.com/support	

Texas Instruments
http://www.ti.com

© Texas Instruments 2023

ANALOG MUX SPIA- DCA/FTDI

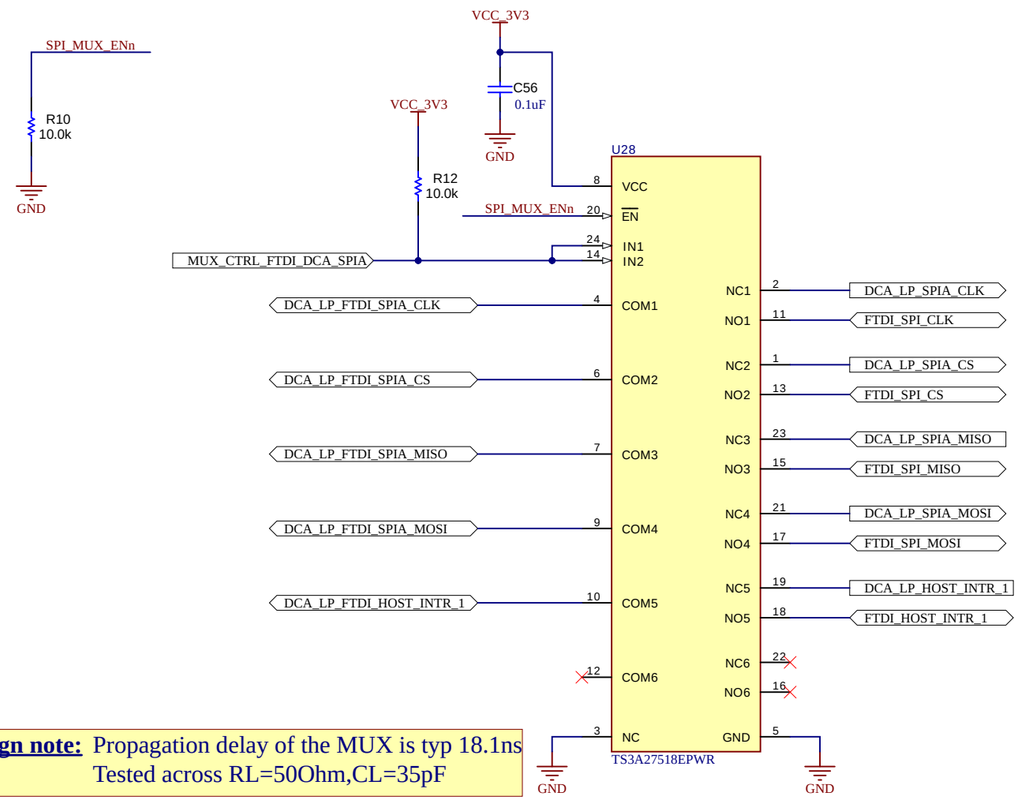

Design note: Propagation delay of the MUX is typ 18.1ns
Tested across RL=50Ohm,CL=35pF

ANALOG MUX- SPI B/ I2C, LVDS VALID, SYS RESET OUT (OPTIONAL)

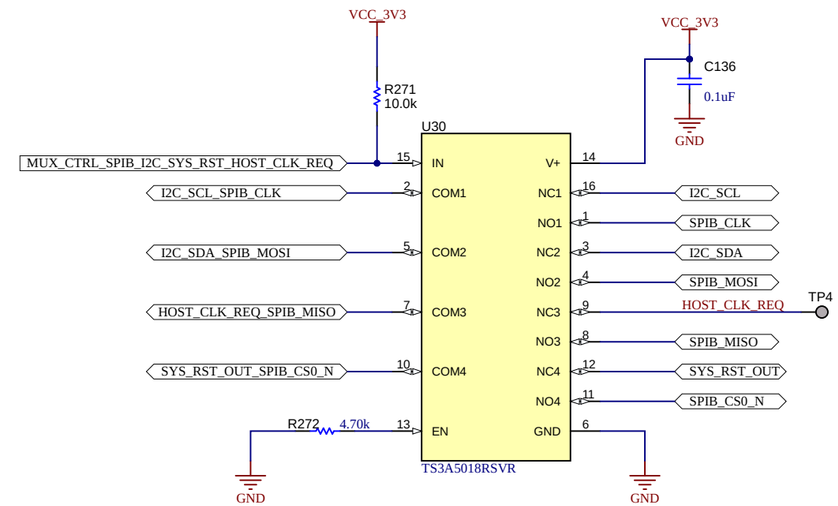

ANALOG MUX - LIN/UARTB

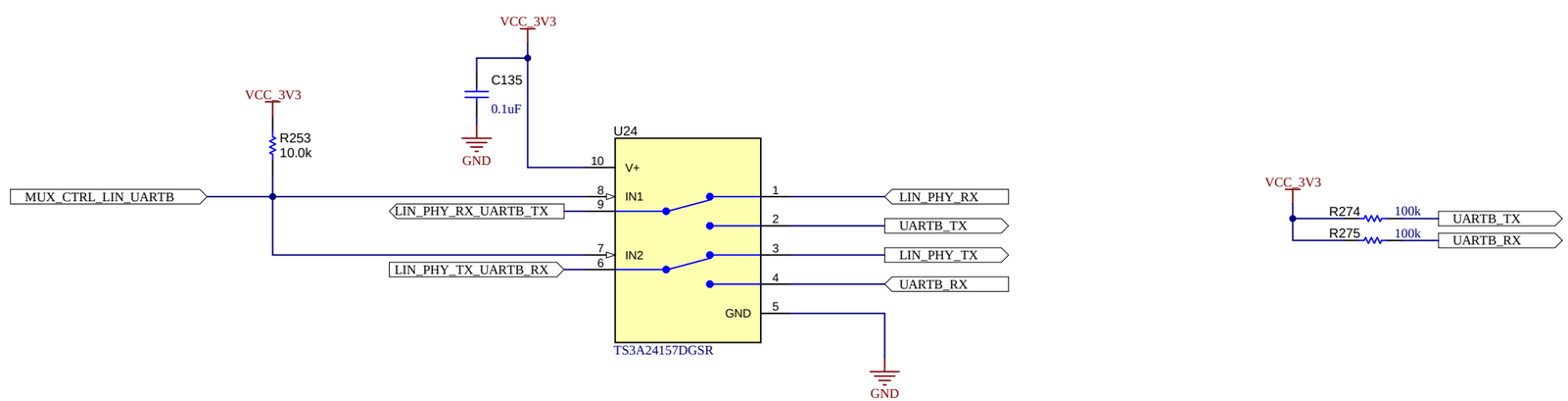

Texas Instruments and/or its licensors do not warrant the accuracy or completeness of this specification or any information contained therein. Texas Instruments and/or its licensors do not warrant that this design will meet the specifications, will be suitable for your application or fit for any particular purpose, or will operate in an implementation. Texas Instruments and/or its licensors do not warrant that the design is production worthy. You should completely validate and test your design implementation to confirm the system functionality for your application.

Orderable: AWRL6888EVM	Designed for: Public Release	Mod. Date: 14-08-2025	
TID #: N/A	Project Title: xWRL6888 EVM		
Number: PROC207 Rev: A	Sheet Title: Analog Mux SPI and UART B		
SVN Rev: 4450	Assembly Variant: 01_AWR	Sheet: 11 of 18	
Drawn By: Mistral	File: PROC207A_Analog_MUX_SPI.SchDoc	Size: B	
Engineer: Mistral	Contact: http://www.ti.com/support		

Texas Instruments
http://www.ti.com
© Texas Instruments 2023

XDS110 - INTERFACE

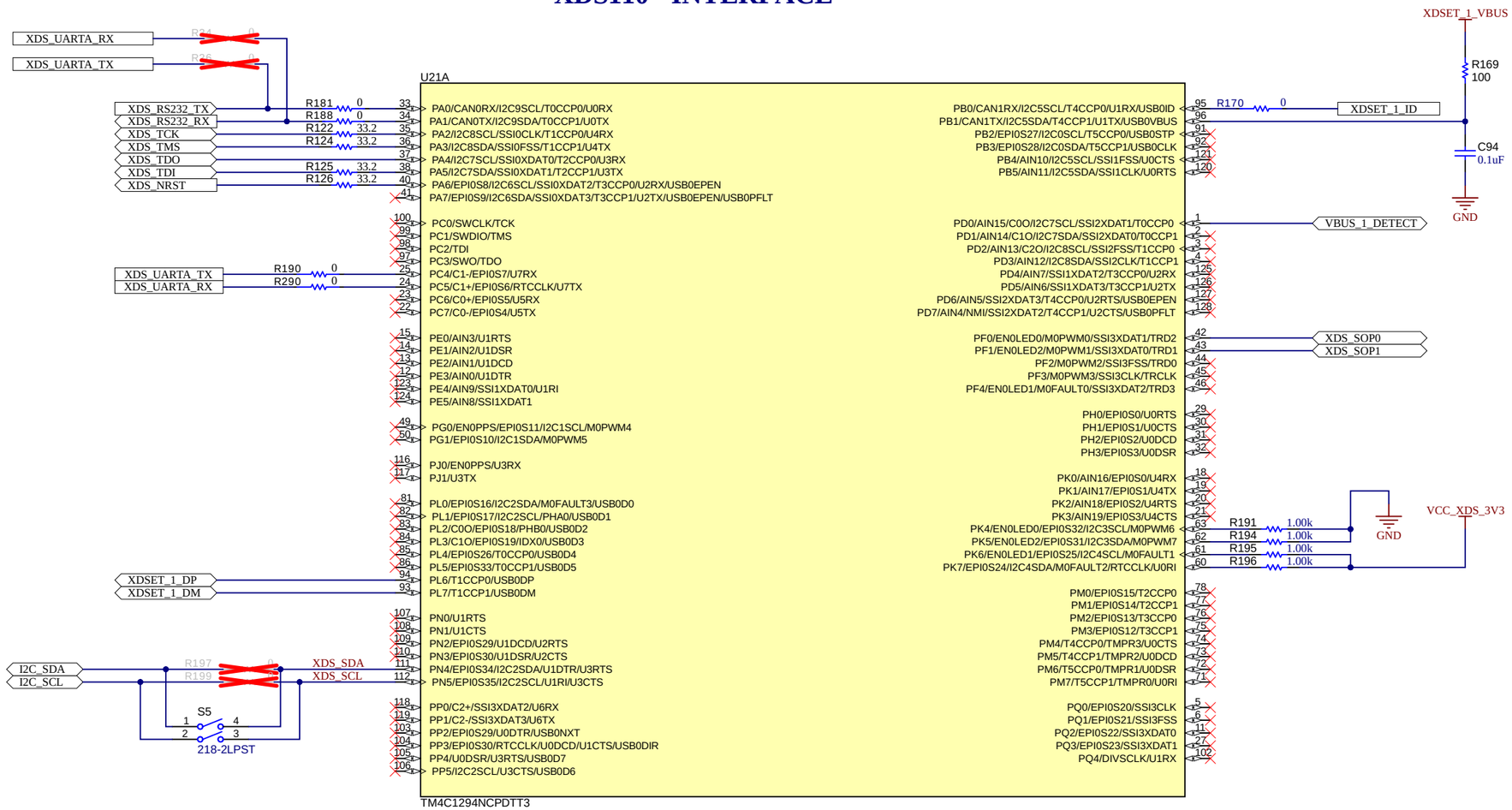

XDS110 - POWER

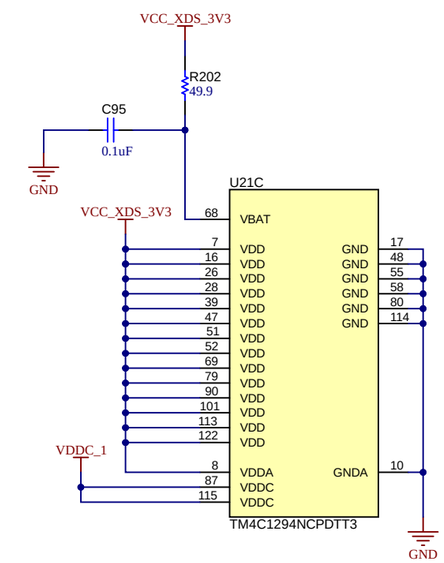

XDS110 - XTAL

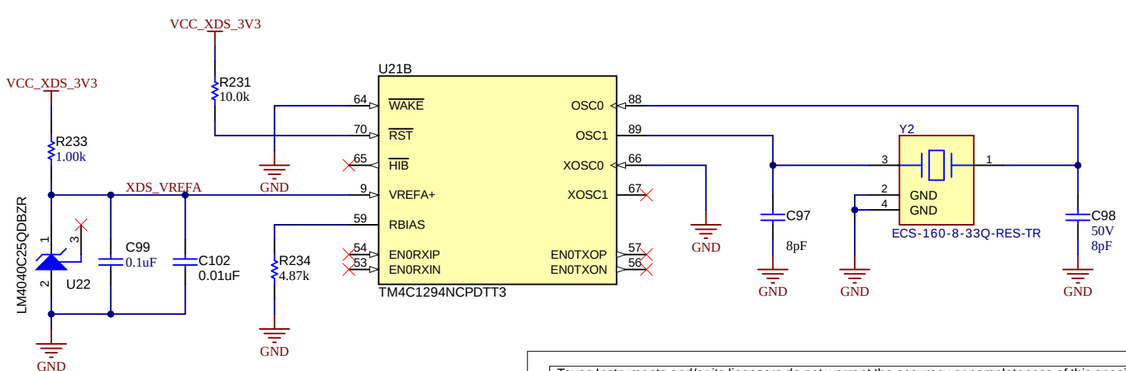

DECOUPLING CAPS - XDS

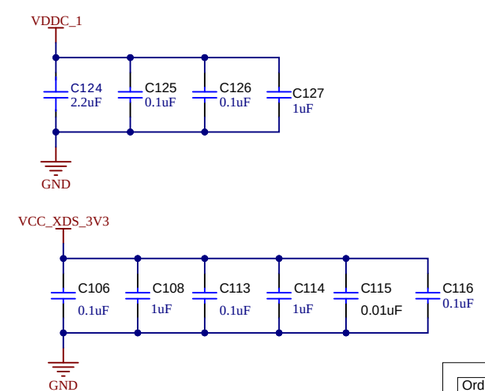

VBUS_DETECT

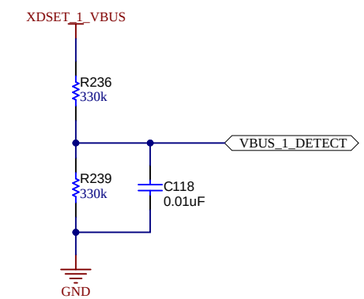

Orderable: AWRL6888EVM	Designed for: Public Release	Mod. Date: 14-08-2025	
TID #: N/A	Project Title: xWRL6888 EVM		
Number: PROC207 Rev: A	Sheet Title: XDS110_INTERFACE		
SVN Rev: 4450	Assembly Variant: 01_AWR	Sheet: 12 of 18	
Drawn By: Mistral	File: PROC207A_XDS110_Interface.SchDoc	Size: B	
Engineer: Mistral	Contact: http://www.ti.com/support		

Texas Instruments and/or its licensors do not warrant the accuracy or completeness of this specification or any information contained therein. Texas Instruments and/or its licensors do not warrant that this design will meet the specifications, will be suitable for your application or fit for any particular purpose, or will operate in an implementation. Texas Instruments and/or its licensors do not warrant that the design is production worthy. You should completely validate and test your design implementation to confirm the system functionality for your application.

Texas Instruments
http://www.ti.com
© Texas Instruments 2023

ANALOG MUX -XDS /FTDI, DCA RS232, CAN_FD / UART A

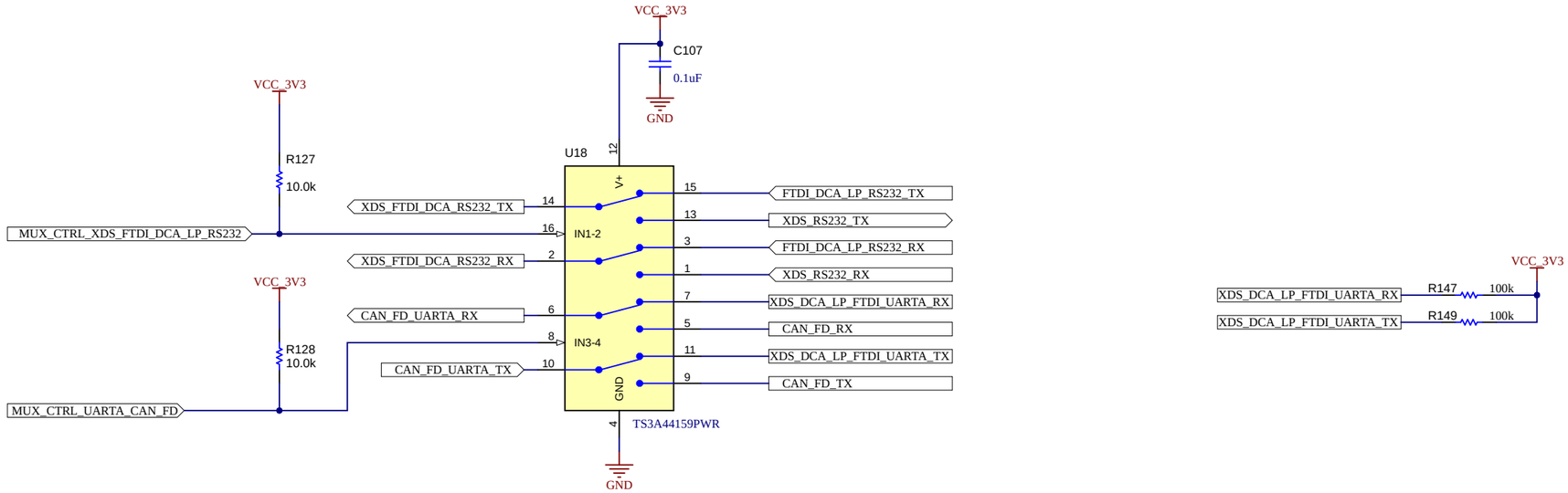

CAN_FD_B_TRANSCEIVER

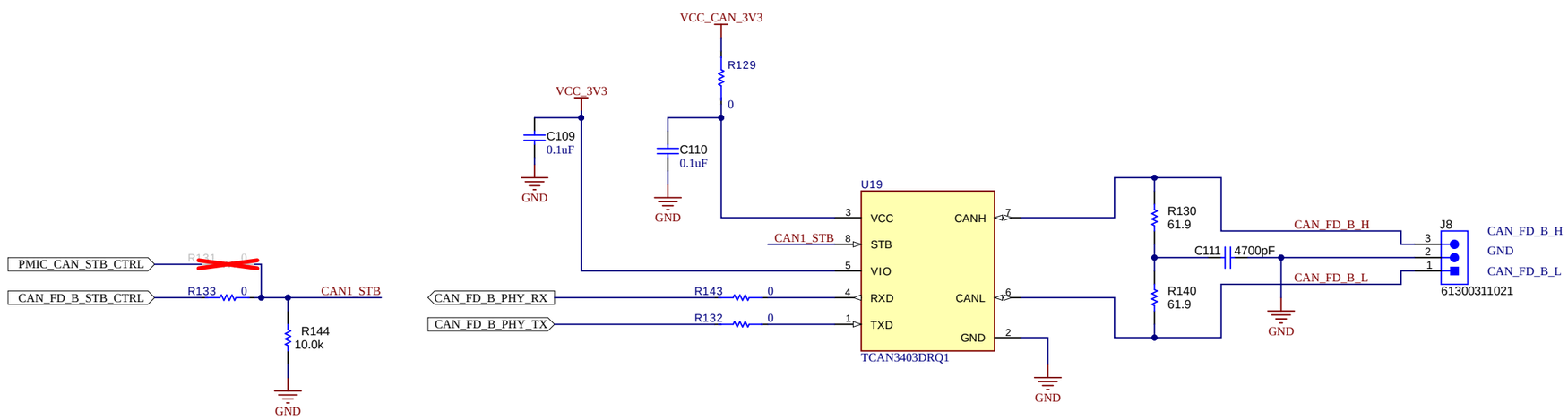

Texas Instruments and/or its licensors do not warrant the accuracy or completeness of this specification or any information contained therein. Texas Instruments and/or its licensors do not warrant that this design will meet the specifications, will be suitable for your application or fit for any particular purpose, or will operate in an implementation. Texas Instruments and/or its licensors do not warrant that the design is production worthy. You should completely validate and test your design implementation to confirm the system functionality for your application.

Orderable: AWRL6888EVM		Designed for: Public Release	Mod. Date: 14-08-2025
TID #: N/A		Project Title: xWRL6888 EVM	
Number: PROC207	Rev: A	Sheet Title: ANALOG MUX AND CAN FD_B	
SVN Rev: 4450		Assembly Variant: 01_AWR	Sheet: 13 of 18
Drawn By: Mistral		File: PROC207A_MUX_CAN_FD.SchDoc	Size: B
Engineer: Mistral		Contact: http://www.ti.com/support	

Texas Instruments
http://www.ti.com
© Texas Instruments 2023

CAN_FD_TRANSCEIVER

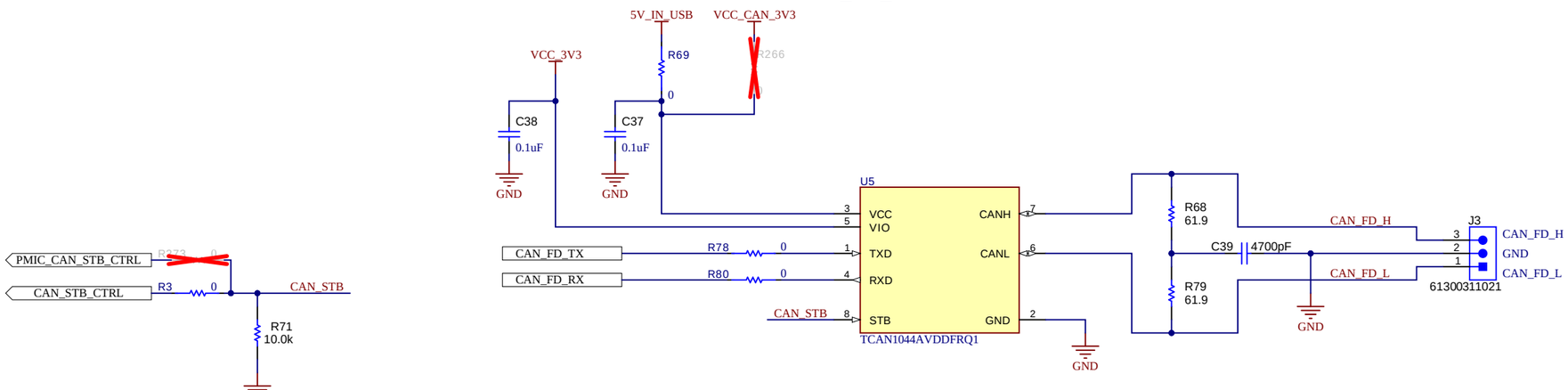

Design Note: Mount R69 and DNP R266 for TCAN1044AVDDFRQ1
Mount R266 and DNP R69 for TCAN3403DRQ1

LIN TRANSCEIVER

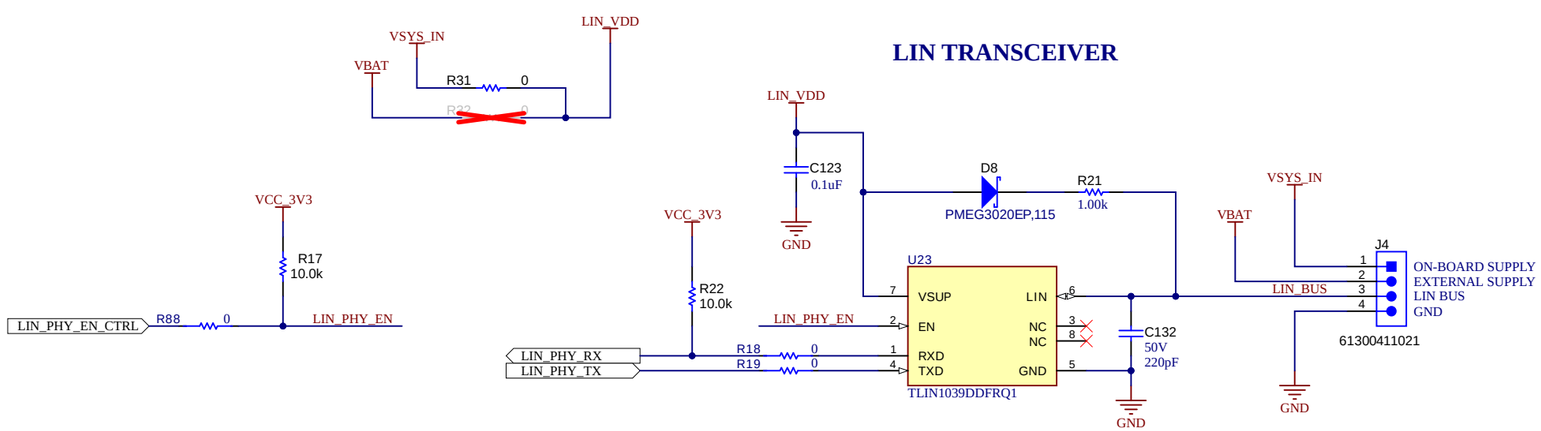

Texas Instruments and/or its licensors do not warrant the accuracy or completeness of this specification or any information contained therein. Texas Instruments and/or its licensors do not warrant that this design will meet the specifications, will be suitable for your application or fit for any particular purpose, or will operate in an implementation. Texas Instruments and/or its licensors do not warrant that the design is production worthy. You should completely validate and test your design implementation to confirm the system functionality for your application.

Orderable: AWRL6888EVM	Designed for: Public Release	Mod. Date: 14-08-2025
TID #: N/A	Project Title: xWRL6888 EVM	
Number: PROC207 Rev: A	Sheet Title: CAN_LIN_PHY_INTERFACE	
SVN Rev: 4450	Assembly Variant: 01_AWR	Sheet: 14 of 18
Drawn By: Mistral	File: PROC207A_CAN_LIN_PHY_Interface.SchDoc	Size: B
Engineer: Mistral	Contact: http://www.ti.com/support	

Texas Instruments
http://www.ti.com
© Texas Instruments 2023

FTDI - USB to SPI CONVERTER

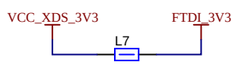

Review Note

FTDI_3V3 Power from XDS LDO 3V3

FTDI SUPPLY DECAPS

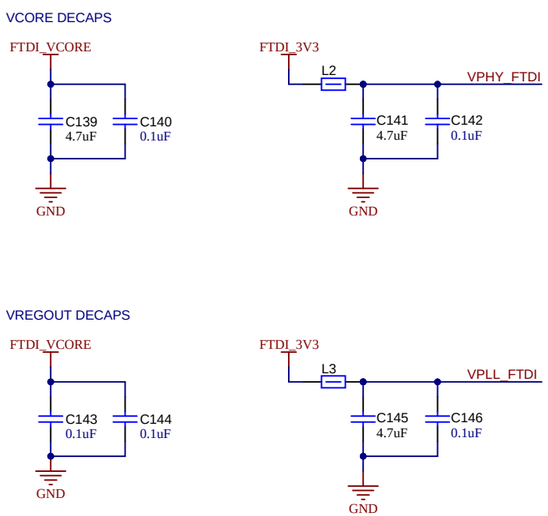

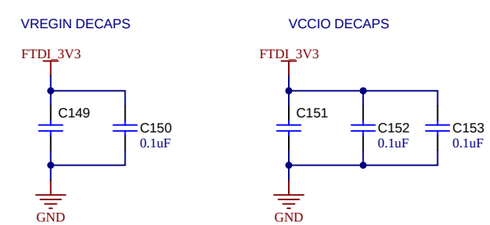

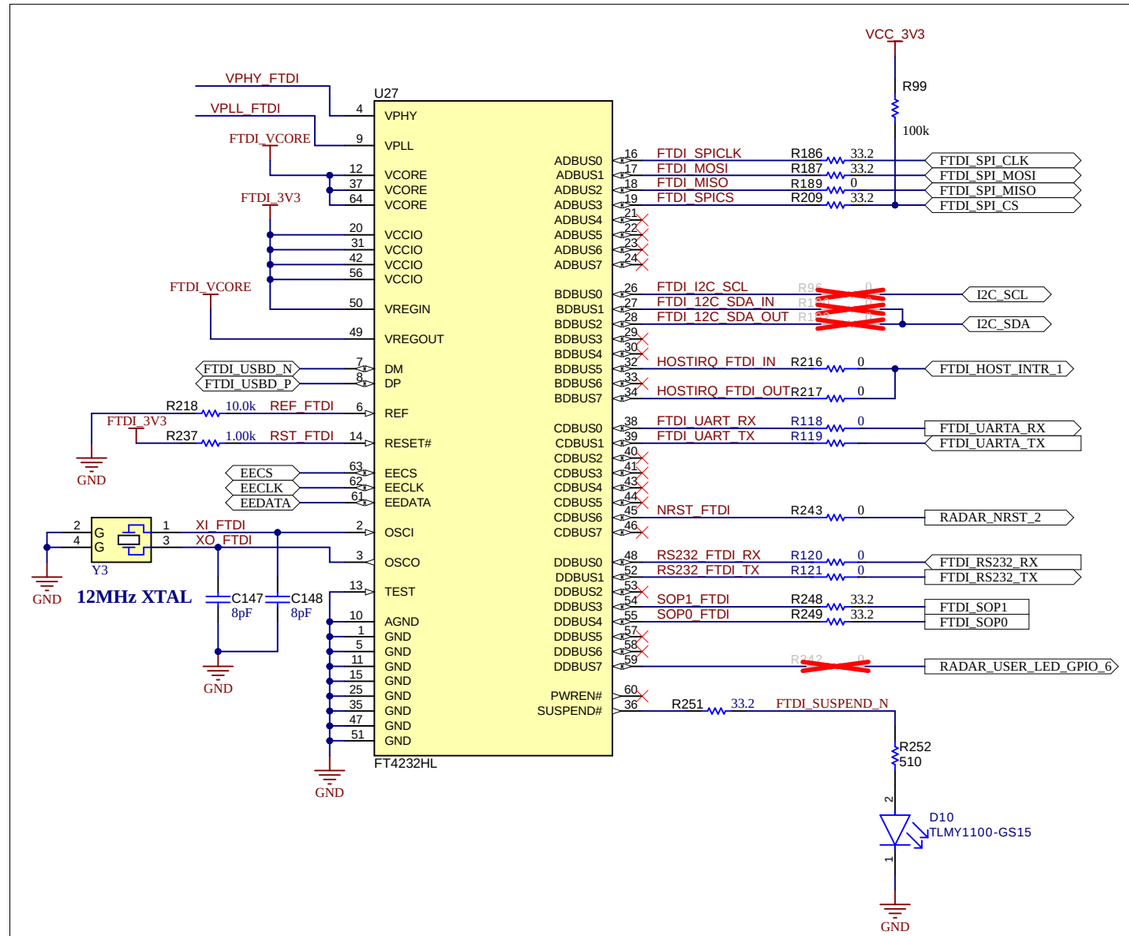

FTDI EEPROM

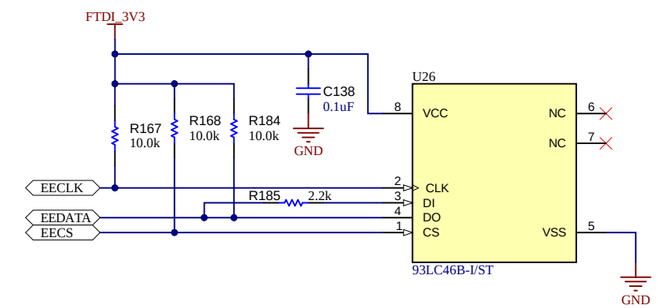

Review Note: Mounted R248,R249 to provide default SOP control Option from FTDI. TI to review and confrim

FTDI USB PORT

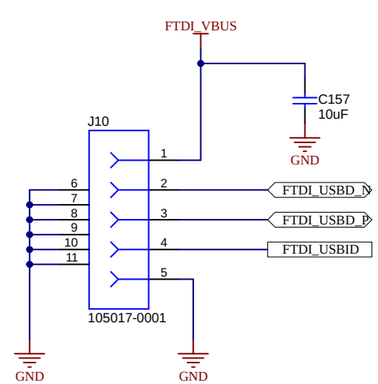

FTDI USB - ESD PROTECTION

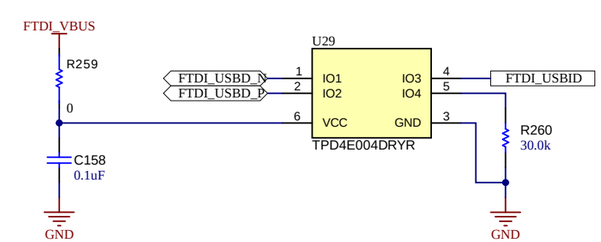

Orderable: AWRL6888EVM	Designed for: Public Release	Mod. Date: 14-08-2025	
TID #: N/A	Project Title: xWRL6888 EVM		
Number: PROC207 Rev: A	Sheet Title: FTDI_USB to SPI/12C/UART_Converter		
SVN Rev: 4450	Assembly Variant: 01_AWR	Sheet: 15 of 18	
Drawn By: Mistral	File: PROC207A_FTDI.SchDoc	Size: B	
Engineer: Mistral	Contact: http://www.ti.com/support		

Texas Instruments and/or its licensors do not warrant the accuracy or completeness of this specification or any information contained therein. Texas Instruments and/or its licensors do not warrant that this design will meet the specifications, will be suitable for your application or fit for any particular purpose, or will operate in an implementation. Texas Instruments and/or its licensors do not warrant that the design is production worthy. You should completely validate and test your design implementation to confirm the system functionality for your application.

Texas Instruments
http://www.ti.com
© Texas Instruments 2023

60-PIN HD CONNECTOR FOR DCA1000

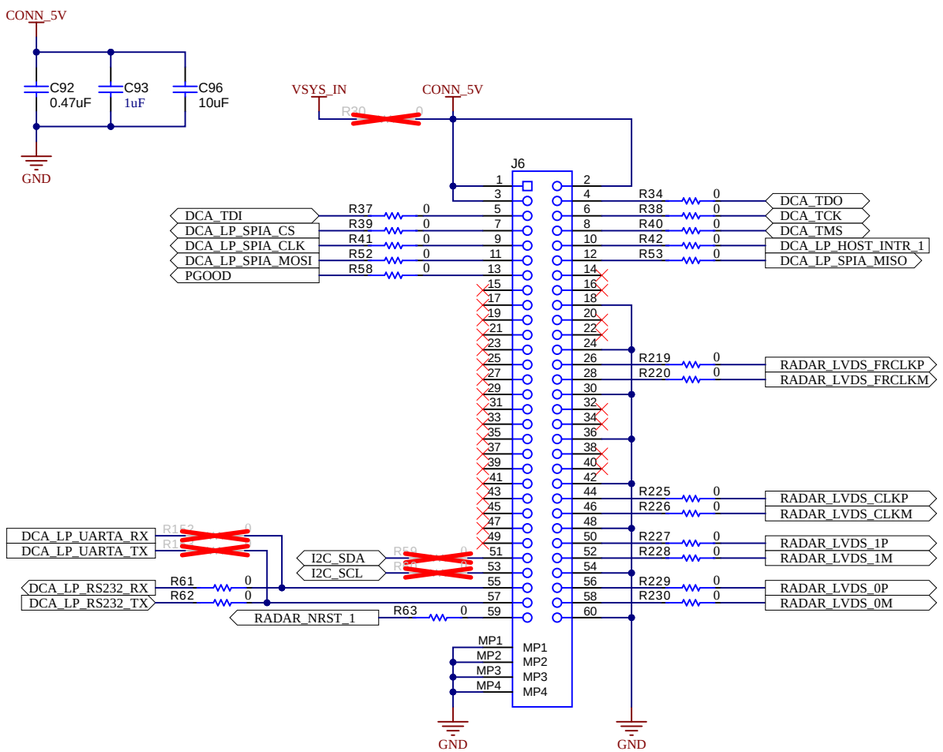

nERROR LED

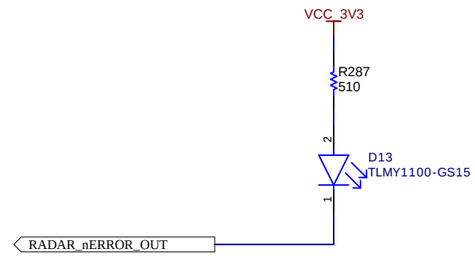

RESET SCHEME

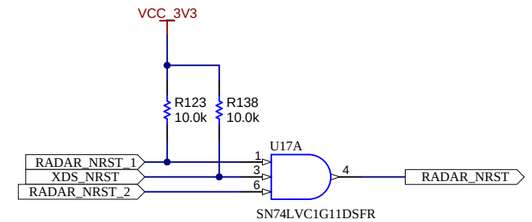

RESET LED

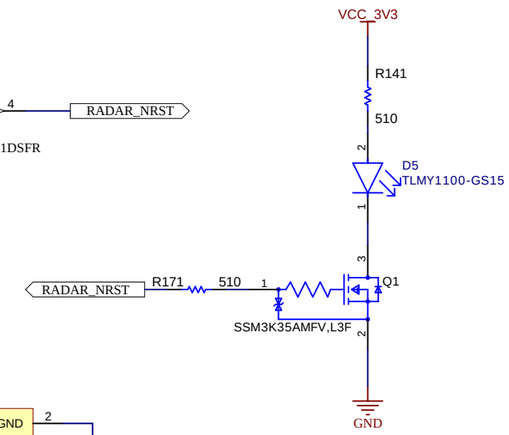

RESET SWITCH

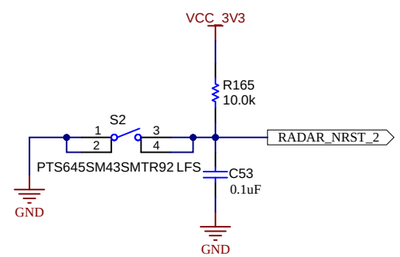

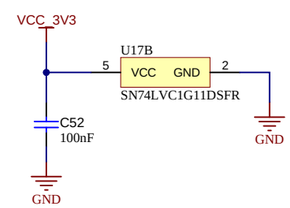

RESET OUT LED

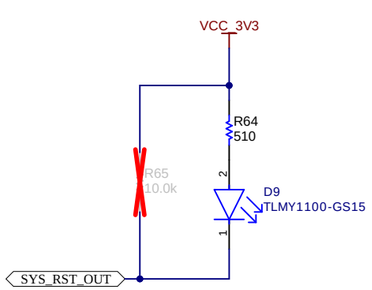

USER LED

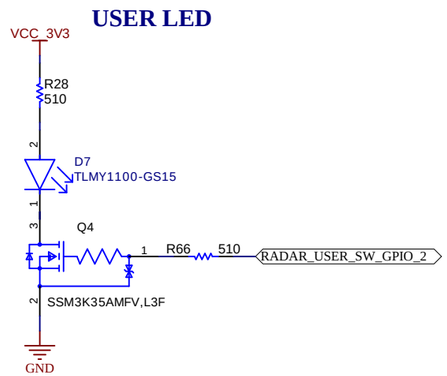

USER SWITCH

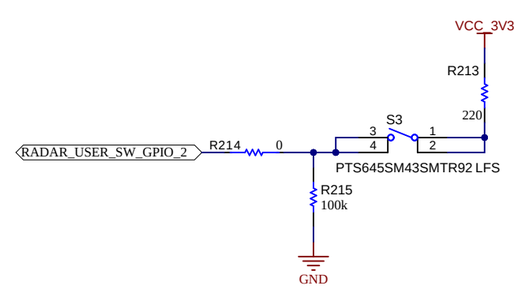

USER LED

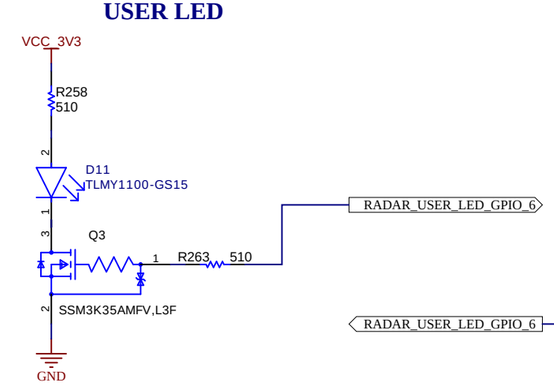

USER SWITCH

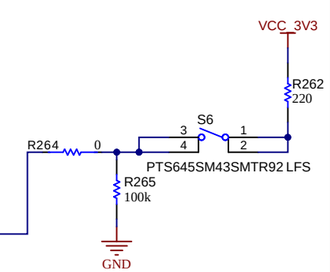

Texas Instruments and/or its licensors do not warrant the accuracy or completeness of this specification or any information contained therein. Texas Instruments and/or its licensors do not warrant that this design will meet the specifications, will be suitable for your application or fit for any particular purpose, or will operate in an implementation. Texas Instruments and/or its licensors do not warrant that the design is production worthy. You should completely validate and test your design implementation to confirm the system functionality for your application.

Orderable: AWRL6888EVM		Designed for: Public Release	Mod. Date: 14-08-2025
TID #: N/A		Project Title: xWRL6888 EVM	
Number: PROC207	Rev: A	Sheet Title: DCA1000_CONN_RESET	
SVN Rev: 4450		Assembly Variant: 01_AWR	Sheet: 16 of 18
Drawn By: Mistral		File: PROC207A_DCA1000_Connector_Reset.SchDoc	Size: B
Engineer: Mistral		Contact: http://www.ti.com/support	

TEXAS INSTRUMENTS
http://www.ti.com
© Texas Instruments 2023

I2C HEADER

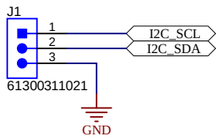

SPI A HEADER

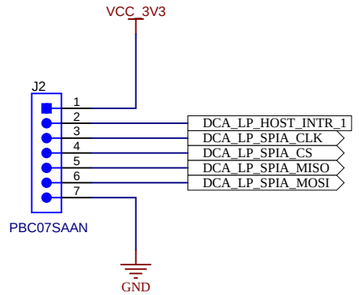

SPI B HEADER

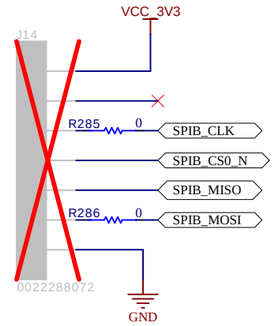

UARTA HEADER

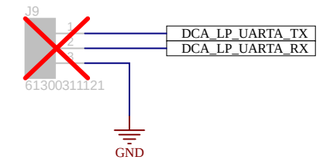

UARTB HEADER

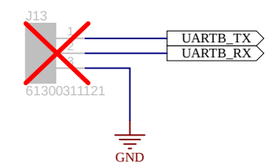

LP/BP CONNECTOR

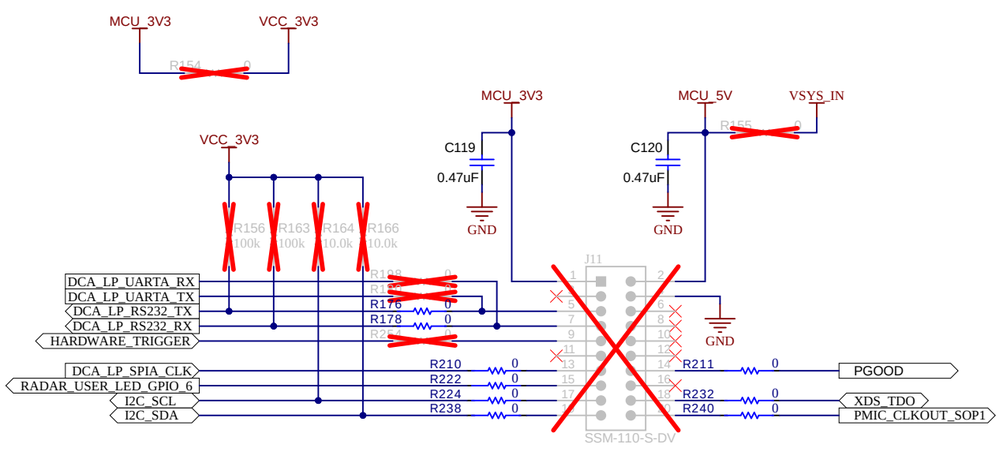

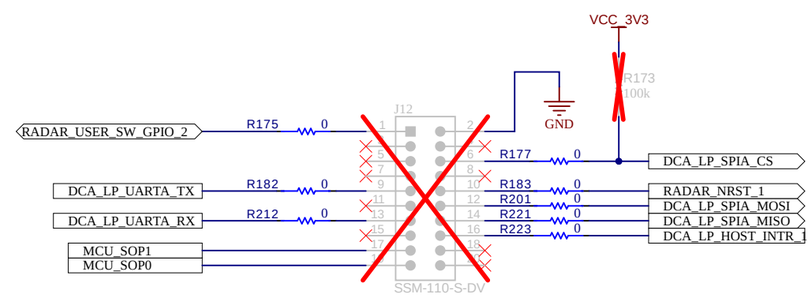

Review Note:

HARDWARE_TRIGGER net is terminated to the connector

Texas Instruments and/or its licensors do not warrant the accuracy or completeness of this specification or any information contained therein. Texas Instruments and/or its licensors do not warrant that this design will meet the specifications, will be suitable for your application or fit for any particular purpose, or will operate in an implementation. Texas Instruments and/or its licensors do not warrant that the design is production worthy. You should completely validate and test your design implementation to confirm the system functionality for your application.

Orderable: AWRL6888EVM		Designed for: Public Release	Mod. Date: 14-08-2025
TID #: N/A		Project Title: xWRL6888 EVM	
Number: PROC207	Rev: A	Sheet Title: I2C_SPI_UART_LP/BP_INTERFACE_CONN_HEAD	
SVN Rev: 4450		Assembly Variant: 01_AWR	Sheet: 17 of 18
Drawn By: Mistral		File: PROC207A_I2C_SPI_Connector.SchDoc	Size: B
Engineer: Mistral		Contact: http://www.ti.com/support	

Texas Instruments
http://www.ti.com

© Texas Instruments 2023

FID1 FID2 FID3 FID4 FID5 FID6

PCB Number: PROC207
PCB Rev: A

PCB LOGO
Texas Instruments

CE Mark

PCB LOGO
FCC disclaimer

PCB LOGO
WEEE logo

CAUTION HOT SURFACE1

CAUTION HOT SURFACE

Variant/Label Table	
Variant	Label Text
001_AWR	AWRL6888EVM

CAPACITORS HIGHLIGHTED IN THE RED COLOR BOXES ARE ADDED FOR IMPROVEMENT AND THOSE ARE NOT MANDITORY.

LBL1
PCB Label
THT-14-423-10
Size: 0.65" x 0.20 "

ZZ1
Label Assembly Note
This Assembly Note is for PCB labels only

ZZ2
Assembly Note
These assemblies are ESD sensitive, ESD precautions shall be observed.

ZZ3
Assembly Note
These assemblies must be clean and free from flux and all contaminants. Use of no clean flux is not acceptable.

ZZ4
Assembly Note
These assemblies must comply with workmanship standards IPC-A-610 Class 2, unless otherwise specified.

ZZ5
Assembly Note
INDICATION FOR COMPONENTS D* ARE GIVEN AT THEIR CATHODE SIDE.

Texas Instruments and/or its licensors do not warrant the accuracy or completeness of this specification or any information contained therein. Texas Instruments and/or its licensors do not warrant that this design will meet the specifications, will be suitable for your application or fit for any particular purpose, or will operate in an implementation. Texas Instruments and/or its licensors do not warrant that the design is production worthy. You should completely validate and test your design implementation to confirm the system functionality for your application.

Orderable: AWRL6888EVM	Designed for: Public Release	Mod. Date: 01-09-2025	
TID #: N/A	Project Title: xWRL6888 EVM		
Number: PROC207 Rev: A	Sheet Title: HARDWARE		
SVN Rev: 4455 [Locally Modified]	Assembly Variant: 01_AWR	Sheet: 18 of 18	
Drawn By: Mistral	File: PROC207A_Hardware.SchDoc	Size: B	
Engineer: Mistral	Contact: http://www.ti.com/support		

Texas Instruments
http://www.ti.com
© Texas Instruments 2023